South Peninsula Hospital

Administration
4300 Bartlett Street
Homer, AK 99603
907-235-0325 F.907-235-0253

SOUTH PENINSULA HOSPITAL
REQUEST FOR PROPOSAL
Exterior Lobby Door Replacement
Issued: 02/13/23

1. Overview

South Peninsula Hospital (SPH) is seeking a vendor to replace the exterior lobby door. The purpose of this Request for Proposal (RFP) is to solicit responses from competent and experienced vendors that are capable of providing the services as specified herein in a prompt, cost effective, and efficient manner.

2. Inquiries

Questions regarding this RFP may be directed in writing to Harrison Smith, Facilities Manager, at hsm@sphosp.org . All emails must identify the RFP title in the subject line and include the contact information for the person submitting the question. Questions may be submitted as needed until 5:00pm Alaska Standard Time (AKST), March 3, 2023.

SPH will review the submitted questions and respond to all inquiries in writing by replying via email to all interested vendors. Responses will provide the questions received and the accompanying response. This will ensure all potential vendors receive the same information.

3. Background Information

SPH is a full-service hospital serving the Southern Kenai Peninsula, licensed for 22 medical beds and 28 nursing home beds, primarily located at 4300 Bartlett St., Homer, AK 99603, with various satellite locations located in the greater Homer area.

4. Proposal Submission Requirements

All vendors interested in submitting a proposal in response to this RFP must adhere to the following requirements. Failure to do so may result in SPH deeming the proposal to be non-responsive and therefore not eligible for consideration.

4.1 Proposal Submittal Items

Vendors must only submit one proposal, follow the format outlined below, and clearly identify each of the following four criteria within the submittal.

a) **Cover Letter** – submit a cover letter on company letterhead that includes the following:

1. The company's legal name and contact information.
2. An overview of the company's qualifications and experience relevant to the scope of work defined herein.
3. The letter must be signed by an authorized company representative and include that person's contact information.

b) **Scope of Work** – submit a written, detailed description of how section 5 Scope of Work will be accomplished, addressing all items of relevance within that requirement. Please refrain from using marketing information in this part of the proposal submittal.

c) **Price** – submit a written price proposal to provide the good(s) or service(s) as specified herein. The proposed price must include all of the vendor's costs associated with providing the good(s) or service(s) as called for within this RFP and including, but not limited to, wages, administrative overhead, equipment, materials, travel, transportation, lodging, and other similar costs unless stated otherwise. No other costs will be considered for payment.

All proposals will become the property of SPH and may be returned only at the option of SPH. Any information marked as proprietary or confidential will be held in confidence to the greatest extent possible.

4.2 Walk-Through

Vendors are encouraged to schedule a pre-bid walk-through prior to the submission of an RFP response. Walk-throughs can be scheduled with the Facility Manager, Harrison Smith, by emailing hsm@sphosp.org.

4.3 Proposal Submission Deadline

To be considered, a complete proposal package must be received by SPH by the deadline via either of the following methods:

a) Hand delivered or mailed to: South Peninsula Hospital

Attention: Royal Brown
Director of Material Management
4300 Bartlett St.
Homer, AK 99603

b) Electronically transmitted to: rbrown@sphosp.org

The deadline for submission is 5:00 PM Alaska Time, March 10, 2023. Any proposals received after the deadline may not be accepted. Proposals sent via email should be sent as a single PDF document format, with the RFP title noted in the subject line.

4.4 Proposal Preparation Cost

SPH shall not be responsible for any costs associated with preparing and/or submitting a proposal in response to this RFP, in any manner or for any reason.

4.5 Proposal Validity

A vendor's price proposal will remain valid for 30 calendar days from the RFP submission deadline or until an award is made to the successful vendor, whichever is sooner. No price proposal will be accepted if marked "price prevailing at time of delivery", "estimated price", or something similar. All price proposals must be in US dollars.

5. Scope of Work

See attached specifications, including:

- Commercial Folding Door Spec Sheet
- Plan Area
- Mechanical, Electrical, and Structural Drawings and Specifications
- Finish Schedule
- Various As-Built Drawings and Specifications
- Opener Specifications

Notes:

This request is for the exterior door only.

SPH has updated the specifications to include a Besam SW200i-Fold Automatic Commercial Folding Door or equivalent.

SPH will frame to fit the replacement door.

SPH will be responsible for all wall and floor repairs, including paint, carpet, flooring, and base.

6. General Requirements

6.1 Term of Service

The agreement resulting from this RFP shall be effective from the date of execution of the agreement through the completion of services. In no event shall services under the agreement extend beyond December 31, 2023. In the event the work is not completed within this timeframe, SPH, in its sole opinion, may determine the vendor to be in breach of the terms of the agreement.

6.2 RFP Modification

SPH reserves the right to:

a) Modify or otherwise alter any or all of the requirements herein. In the event of a modification, vendors will be given an equal opportunity to modify their proposals as identified in writing by SPH.
b) Reject any proposal not adhering to the requirements set forth within this RFP, either in whole or in part.
c) Reject any or all proposals received.
d) Terminate this RFP at any time, without reason.

6.3 Order of Precedence in the Event of a Conflict

If an agreement is awarded, all terms and conditions herein shall be incorporated into the award along with the vendor's proposal. Any change to the agreement must be through a written

amendment agreed upon by both Parties. In the event of a conflict between the RFP and the vendor's proposal, the more stringent language shall apply.

6.4 Subcontracting

The vendor must disclose to SPH the use and identity of all subcontractors it uses in carrying out the requirements herein. SPH reserves the right to approve all subcontractors if it so chooses. The vendor is solely responsible for the satisfactory performance of and compensation to any and all subcontractors.

6.5 Insurance

The vendor shall have, maintain, and provide proof of Commercial General Liability Insurance, with coverages of $1,000,000 each occurrence and $3,000,000 in aggregate, and Workman's Compensation Insurance, in addition to any applicable insurance required by the State of Alaska or the vendor's primary state of location. The vendor must provide SPH with proof of the insurance required herein, with South Peninsula Hospital as additional insured. The vendor shall be financially responsible for all deductibles, costs, and self-insured retention's and/or self-insurance required herein.

6.6 Indemnification

Except in the case of the sole negligence or willful misconduct of SPH, the vendor shall indemnify, defend and hold harmless SPH, and SPH's officers, agents, and employees from and against any and all liability, claims, damages, losses, expenses, actions, attorney fees and costs and lawsuits whatsoever (including without limitation all claims involving damage to real or personal property, civil rights claims, or claims of infringement of a patent, copyright, trade secret or trademark) caused by or arising out of the performance, acts, or omissions under this RFP by the vendor or any of its officers, agents, representatives, employees or subcontractors or arising from or related to a failure to comply with the requirements herein, and/or applicable state or federal statute, law, regulation, or rule.

6.7 Title 36

Requirements for Title 36 of the Alaska Statutes are NOT applicable to this project.

7. Price and Payment

7.1 Proposal Price

The vendor must submit a written price proposal to provide the good(s) or service(s) as specified herein. The proposed price must include all of the vendor's costs associated with providing the good(s) or service(s) as called for within this RFP and including, but not limited to, wages, administrative overhead equipment, materials, travel, transportation, lodging, and other similar costs unless stated otherwise. No other costs will be considered for payment.

7.2 Payment

The vendor shall be paid for actual work completed in accordance with the requirements herein and the accepted price proposal. The total amount to be paid to the vendor shall not exceed the

vendor's quoted amount, unless otherwise specifically agreed to in advance with supporting justification and in writing by both parties.

Payment to the vendor is contingent on the vendor delivering a bill or invoice to the SPH on a monthly basis. SPH retains the right to require additional documentation to support the submitted invoice. SPH will provide payment to the vendor within 30 calendar days of acceptance of the invoice.

The vendor shall provide the following information with each monthly invoice:

a) Identification of billing period;
b) A statement describing the actual work completed with sufficient detail to reconcile the charges against the work performed and/or work product received by the SPH;
c) Total cost billed for the billing period;
d) Date invoice was submitted;
e) Entity name and contact information; and
f) Name of authorized person originating or submitting the billing for the entity.

Submit invoices to:

Accounts Payable
South Peninsula Hospital
PO Box 1017
Homer, Alaska 99603

8. Conflict of Interests

The Vendor certifies that to the best of their knowledge there is no conflict of interest involving a South Peninsula Hospital official or employee, including:

A. No South Peninsula Hospital employee's immediate family member has an ownership interest in Vendor's company or is deriving personal financial gain from this Agreement.
B. No South Peninsula Hospital official or employee's immediate family member has an ownership interest in Vendor's company or is deriving personal financial gain from this contract.
C. No retired or separated South Peninsula Hospital official or employee who has been retired or separated from the organization for less than one (1) year has an ownership interest in Vendor's company.
D. No South Peninsula Hospital official or employee is contemporaneously employed or prospectively to be employed with the Vendor.
E. Vendor hereby declares it has not and will not provide gifts or hospitality of any dollar value or any other gratuities to any South Peninsula Hospital official or employee to obtain or maintain an Agreement or similar contract.

Vendor must disclose any relationship with any South Peninsula Hospital official or employee.

9. COVID-19 REQUIREMENTS

Vendor agrees to follow all policies, procedures, and infection control guidelines of SPH related to Covid-19.

10. Evaluation and Selection

Proposals will be evaluated by SPH staff based upon the responsiveness to the submission requirements described in Section 4, and in any other manner deemed appropriate by the SPH to determine the proposal most advantageous to the SPH, including at least three references for similar projects and/or experiences in Alaska, as well as information pertaining to key personnel and equipment.

SPH reserves the right to waive informalities and minor inaccuracies. SPH reserves the right to reject any and/or all proposals which it deems to be not in the best interests of SPH and to proceed with the next proposer or to utilize an entirely different process at any time during the process.

AUTOMATIC COMMERCIAL FOLDING DOORS

BACK

AUTOMATIC COMMERCIAL FOLDING DOORS

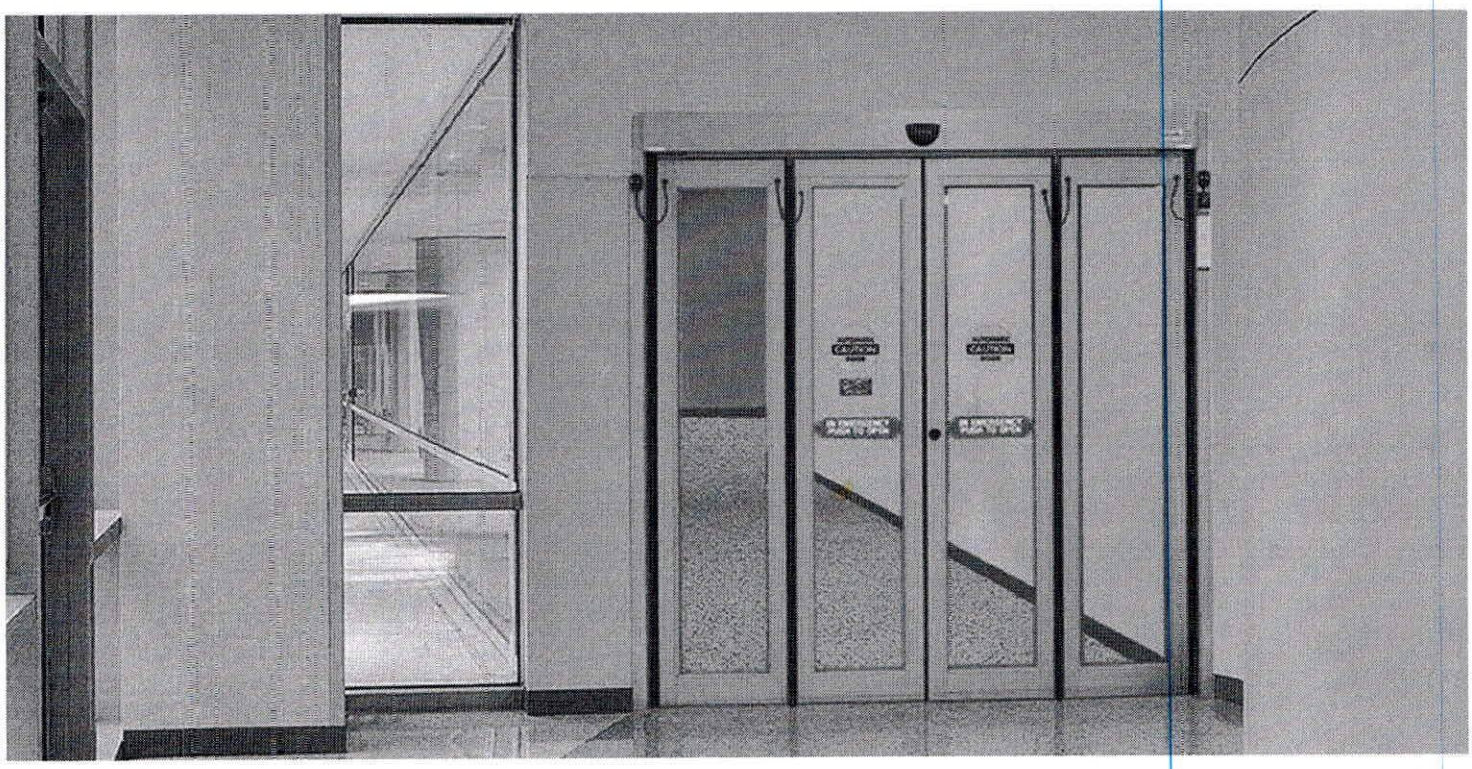

Besam SW200i-Fold Automatic Commercial Folding Door

Convenience for Small Entrances

When space is limited, look to automatic commercial folding doors for maximum door opening. Whether you choose two or four-panel, you are assured of an automatic entrance package that provides convenience and accessibility in the smallest of environments.

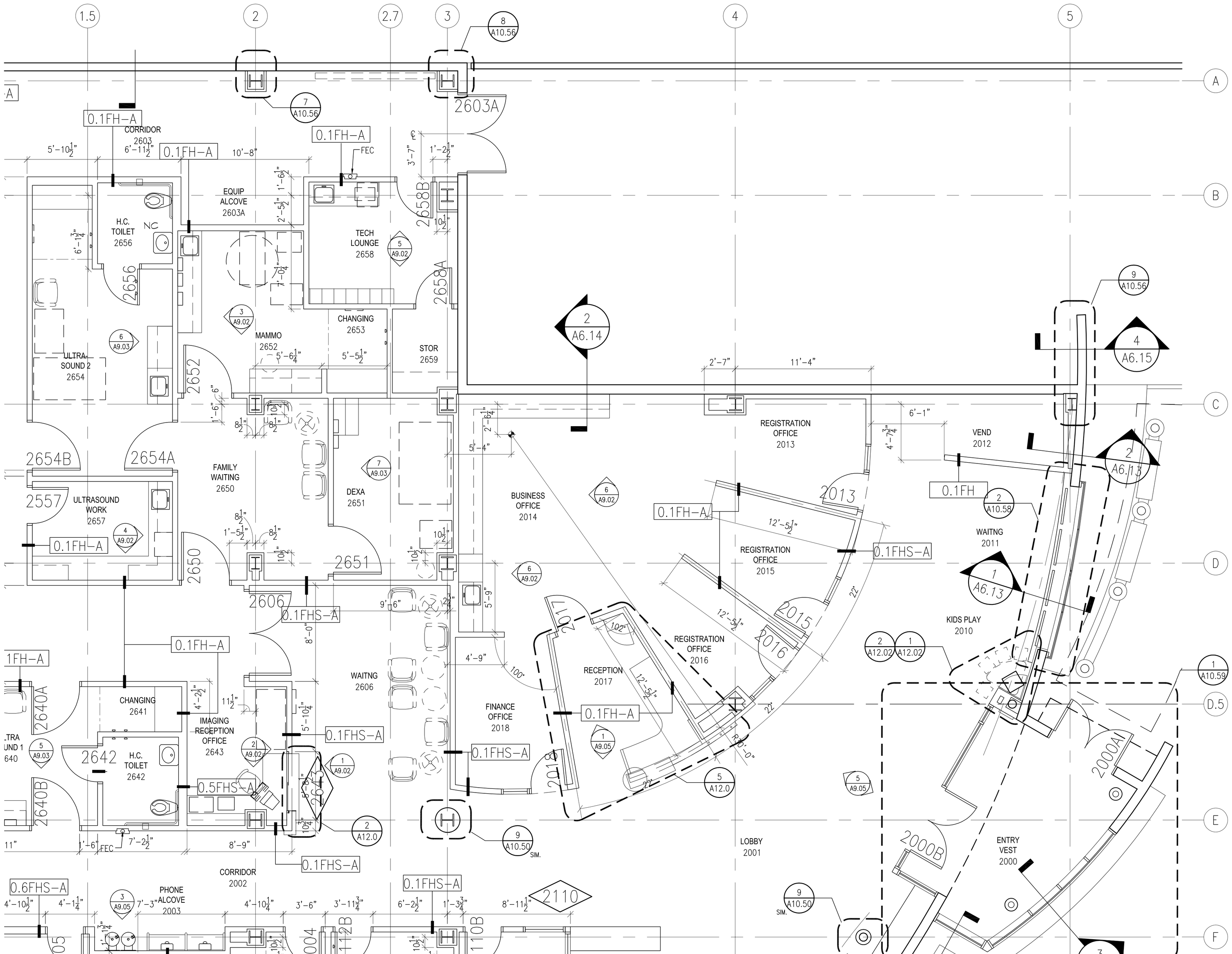

1 ENLARGED PLAN – LEVEL 2, SECTOR C2

SCALE: 1/4" = 1'-0"

KEYPLAN

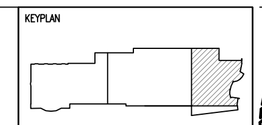

FLOOR PLAN GENERAL NOTES:

A. INTERIOR DIMENSIONS ARE GIVEN TO FACE OF FINISH, U.O.N. ALL INTERIOR PARTITIONS TYPE 0.1FH–A, U.O.N.

B. PROVIDE BACKING IN WALLS FOR WALL MTD. EQUIP., CASEWORK, TOILET ACCESSORIES, CRASH RAILS, ETC. & OWNER PROVIDED EQUIP., FURNISHINGS, ETC. INDICATED ON THE DETAILED PLANS & INTERIOR ELEVATIONS.

C. SEE DETAILED WALL SECTIONS, A6 – SERIES FOR EXT. WALL ASSEMBLIES.

D. SEE DETAILED EXT. ELEVATIONS, A5–SERIES, FOR ADDITIONAL DIMENSIONS OF EXT. ELEMENTS.

E. SEE DETAILED PLANS, A3–SERIES, AND INT. ELEVATIONS, A9–SERIES, FOR ADDITIONAL INFORMATION.

F. SEE CIVIL FOR ANY SITE MODIFICATIONS.

KMD KAPLAN McLAUGHLIN DIAZ

RIM ARCHITECTS

SOUTH PENINSULA HOSPITAL
EAST ADDITION & ALTERATIONS – PHASE 1
HOMER, ALASKA

ENLARGED PLAN – LEVEL 2, SECTOR C2

Revisions

Date	03/08/06
Drawn	SK
Checked	MV
Job No.	03117

Sheet No.

A3.02C2

SOUTH PENINSULA HOSPITAL
LOBBY DOORS REPLACEMENT
4300 BARTLETT ST., HOMER, AK 99603

MECHANICAL — CENTRAL ALASKA ENGINEERING COMPANY
32215 LAKEFRONT DR., SOLDOTNA, AK 99669 (907) 260-5311 EMAIL: jherring@akengineer.com

ELECTRICAL — NORTHERN ELECTRICAL ENGINEERING CONSULTING
8410 FOXLAIR CR., ANCHORAGE, AK 99507 (907) 382-1455 EMAIL: james@northern.engineering

STRUCTURAL — BISHOP ENGINEERING, LLC
P.O. BOX 2501, HOMER, ALASKA, 99603 EMAIL: jbishop-engineering.com

GENERAL NOTES

1. THE CONTRACTOR SHALL PROVIDE ALL MATERIALS AND LABOR NECESSARY FOR A COMPLETE AND OPERABLE SYSTEM. THE DRAWINGS ARE PARTLY DIAGRAMMATIC NOT NECESSARILY SHOWING ALL OFFSETS OR EXACT LOCATIONS OF BUILDING DETAILS. IT IS THE RESPONSIBILITY OF THE INSTALLER TO COORDINATE THEIR WORK WITH OTHER TRADES AND FIELD CONDITIONS. ANY DEVIATIONS FROM THE PLANS SHALL BE BROUGHT TO THE ATTENTION OF THE PROJECT MANAGER.
2. ALL WORK SHALL BE DONE IN ACCORDANCE WITH THE LATEST ADOPTED EDITION OF THE INTERNATIONAL BUILDING CODE (IBC), INTERNATIONAL MECHANICAL CODE (IMC), UNIFORM PLUMBING CODE (UPC), INTERNATIONAL FIRE CODE (IFC), INTERNATIONAL FUEL GAS CODE (IFGC), AND THE NATIONAL ELECTRIC CODE (NEC) AS APPLICABLE.
3. ALL EQUIPMENT LISTED IS REPRESENTATIVE OF THE STANDARD OF QUALITY AND PERFORMANCE REQUIRED. "OR EQUAL" SUBSTITUTIONS WILL BE CONSIDERED IF THE SUBSTITUTES ARE SHOWN TO BE EQUAL OR BETTER QUALITY, INCLUDING EFFICIENCY OF PERFORMANCE, SIZE AND WEIGHT.
4. ALL MATERIALS SHALL BE NEW AND UNUSED, INSTALLED IN ACCORDANCE WITH THE MANUFACTURER'S DIRECTIONS AND IN THE BEST PRACTICE OF THE CRAFT. OBTAIN OWNER'S APPROVAL OF ALL PRODUCTS PRIOR TO ORDERING OR INSTALLING ANY PART OF ANY SYSTEM.
5. THE CONTRACTOR SHALL SUBMIT PRODUCT DATA COMPILED IN A BOUND NOTEBOOK FOR ALL SYSTEMS. ALL PRODUCT DATA SHALL BE SUBMITTED AT ONE TIME, PARTIAL SUBMITTALS WILL BE RETURNED WITHOUT REVIEW. PRODUCT DATA SHALL BE APPROPRIATELY MARKED TO INDICATE PROPOSED PRODUCT.
6. PROVIDE THE OWNER WITH AN OPERATING AND MAINTENANCE MANUAL, TO INCLUDE MANUFACTURER'S SPECIFICATIONS, OPERATING AND MAINTENANCE INSTRUCTIONS, WARRANTY INFORMATION ON EACH PIECE OF EQUIPMENT, AND SCHEMATIC DIAGRAMS OF CONTROL SYSTEMS AS-BUILT, AS WELL AS A SOURCE OF SUPPLY FOR SPARE PARTS AND SERVICE.
7. PROVIDE WORKABLE ACCESS TO ALL SERVICEABLE AND/OR OPERABLE EQUIPMENT.
8. WHEN WORK NOT SPECIFICALLY CALLED OUT IS REQUIRED TO COMPLETE THE PROJECT, IT SHALL BE OF THE BEST MATERIAL AND WORKMANSHIP.
9. THE CONTRACTOR SHALL TAKE ALL NECESSARY PRECAUTIONARY MEASURES TO PROTECT THE PUBLIC AND ADJACENT PROPERTIES FROM DAMAGE THROUGHOUT CONSTRUCTION. CONTRACTOR ASSUMES ALL LIABILITY FOR DAMAGES INCURRED DURING CONSTRUCTION.
10. CONTRACTOR SHALL ESTABLISH AND VERIFY ALL OPENINGS AND INSERTS FOR MECHANICAL, ELECTRICAL, AND PLUMBING WITH APPROPRIATE TRADES.
11. CONTRACTOR SHALL PROVIDE ALL NECESSARY TEMPORARY BRACING, SHORING, GUYING, OR OTHER MEANS TO AVOID EXCESSIVE STRESSES AND TO HOLD STRUCTURAL ELEMENTS IN PLACE DURING CONSTRUCTION.
12. ALL COMPONENTS AND EQUIPMENT SHALL BE INSTALLED PER MANUFACTURE'S PRINTED RECOMMENDATIONS.
13. VERIFY ALL ROUGH OPENING SIZES AND DETAILS FOR DOORS, WINDOWS, EXHAUST FANS, AND VENTS PRIOR TO CONSTRUCTION.
14. PROVIDE AN APPROVED FLASHING FOR EXTERIOR OPENINGS.
15. INSURE ALL CONSTRUCTION MEETS THE REQUIREMENTS FOR ADAAG COMPLIANCE. THIS SHALL INCLUDE DOOR SIZES, THRESHOLDS, DOOR PULLS, DOOR HARDWARE AND GRAB BARS WHERE APPLICABLE. PROVIDE VISUAL ALARMS, NOTIFICATION DEVICES AND TELEPHONE AS REQUIRED TO COMPLY WITH ADAAG 9.3 AND/OR 9.3.2.

SHEET INDEX

STATE OF ALASKA 49TH JERRY P. HERRING AELM-9287 DECEMBER 20, 2022 REGISTERED PROFESSIONAL ENGINEER

NO.	REVISION	DATE

CENTRAL ALASKA ENGINEERING COMPANY, LLC.
32215 LAKEFRONT DR., SOLDOTNA, AK 99669
PHONE (907) 260-5311 FAX (907) 260-5312
AECL 1481
E-MAIL: JHERRING@AKENGINEER.COM

PROJECT: SOUTH PENINSULA HOSPITAL LOBBY DOORS REPLACEMENT
4300 BARTLETT ST., HOMER, AK 99603

CLIENT: KENAI PENINSULA BOROUGH
KPB PURCHASING & CONTRACTING DEPARTMENT
47140 E POPPY LANE, SOLDOTNA, AK 99669 (907) 714-2260

DESIGN REVIEW DOCUMENTS
DECEMBER 20, 2022

DRAWN: BD
CHECKED: JH

SHEET CONTENTS: PROJECT SPECIFICATIONS

CATEGORY: M
SHEET: 0.1

ISSUED FOR CONSTRUCTION

SCALE: AS SHOWN

AutoCAD FILE:sph lobby doors ifc.dwg

ISSUED FOR CONSTRUCTION

SHEET NOTES:

1. EXISTING WALL TYPE 1
   5/8" GWB OVER,
   VAPOR RETARDER OVER,
   6" METAL STUDS @ 16" O.C. W/BATT INSUL. OVER,
   GYPSUM SHEATHING OVER,
   AIR INFILTRATION BARRIER OVER,
   METAL WALL PANEL @ EXTERIOR

   REPAIR AND REPAINT ALL INTERIOR SHEETROCK IN

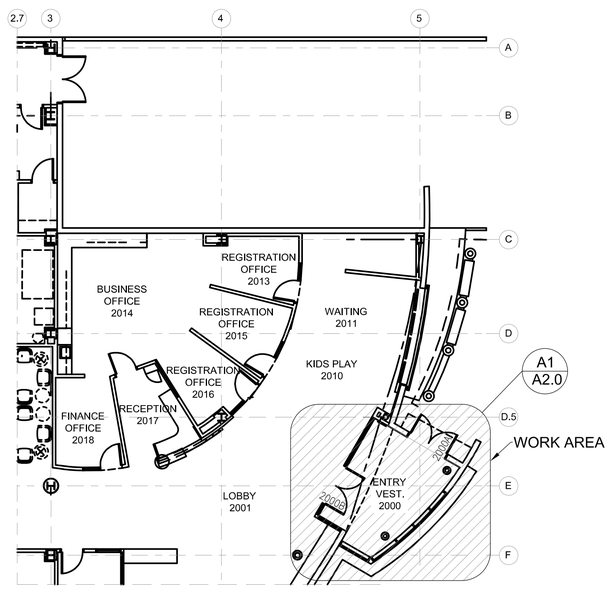

C1 M1.0 PROJECT LOCATION
N.T.S
PLAN REF

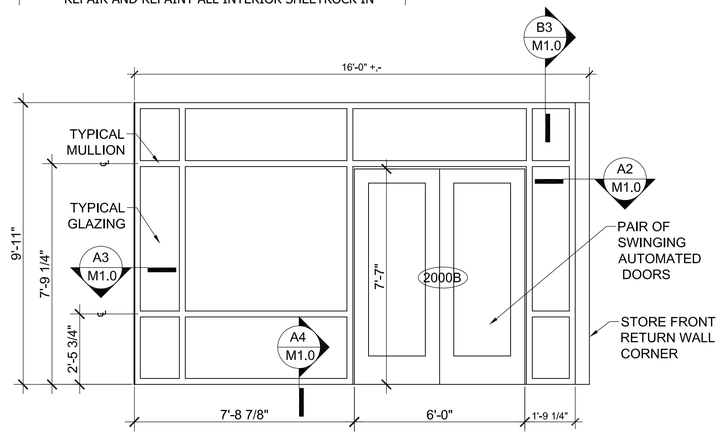

C2 M1.0 EXISTING INTERIOR ELEVATION @ 2000B DOOR
SCALE: 3/8" = 1'0" ON 22"x34"
SCALE: 3/16" = 1'0" ON 11"x17"

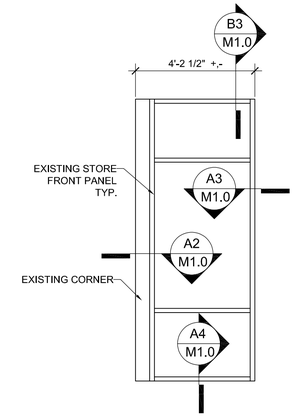

C3 M1.0 EXISTING STORE FRONT WALL
SCALE: 3/8" = 1'0" ON 22"x34"
SCALE: 3/16" = 1'0" ON 11"x17"

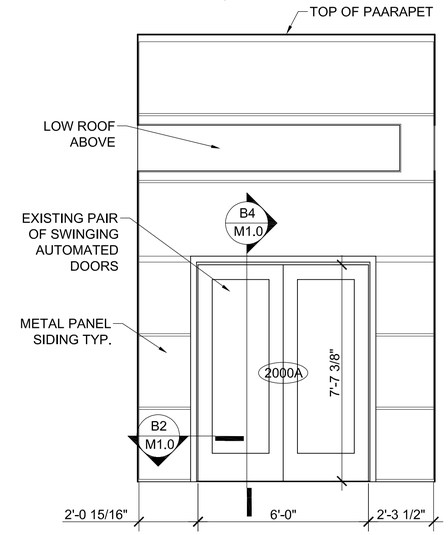

C4 M1.0 EXISTING EXTERIOR ELEVATION @ 2000A DOOR
SCALE: 3/8" = 1'0" ON 22"x34"
SCALE: 3/16" = 1'0" ON 11"x17"

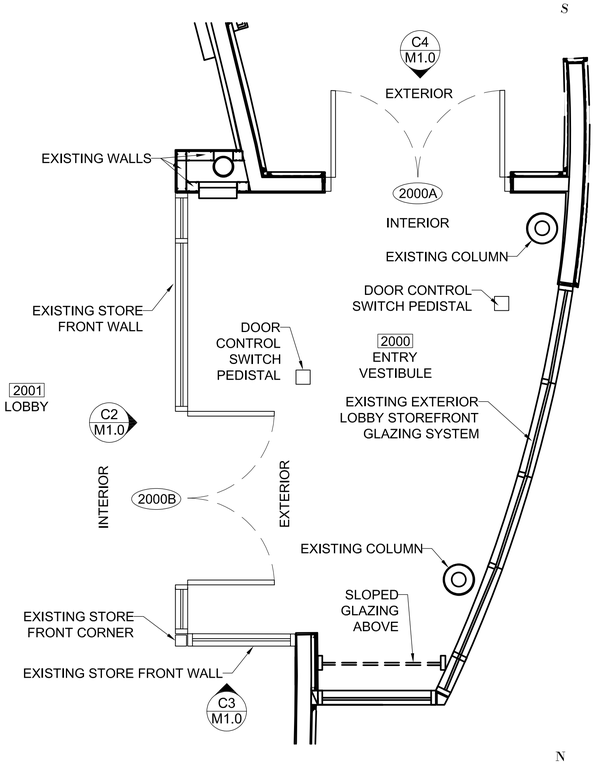

A1 M1.0 EXISTING ENTRY VESTIBULE PLAN
SCALE: 3/8" = 1'0" ON 22"x34"
SCALE: 3/16" = 1'0" ON 11"x17"
PLAN REF

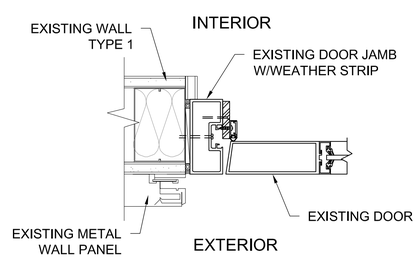

B2 M1.0 EXISTING JAMB DETAIL
SCALE: 3" = 1'0" ON 22"x34"
SCALE: 1-1/2" = 1'0" ON 11"x17"

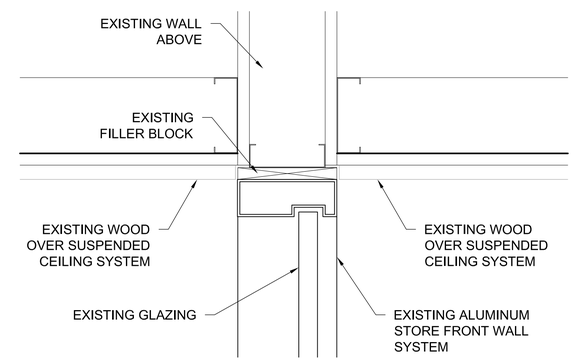

B3 M1.0 EXISTING HEAD DETAIL
SCALE: 3" = 1'0" ON 22"x34"
SCALE: 1-1/2" = 1'0" ON 11"x17"

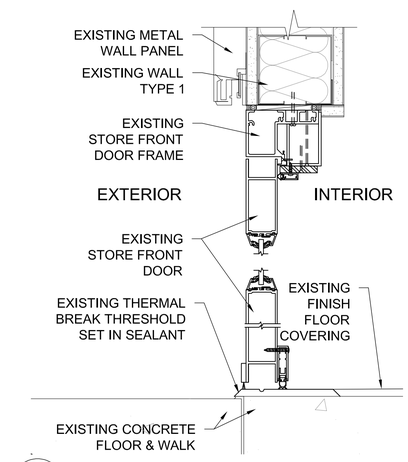

B4 M1.0 EXISTING HEAD & SILL DETAIL
SCALE: 3" = 1'0" ON 22"x34"
SCALE: 1-1/2" = 1'0" ON 11"x17"

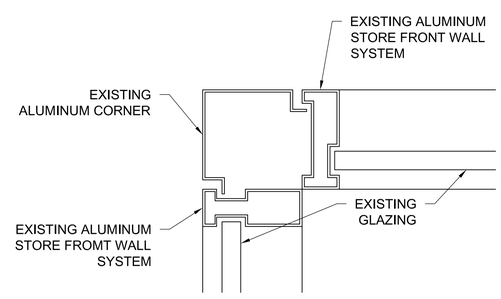

A2 M1.0 EXISTING CORNER JAMB SECTION
SCALE: 3" = 1'0" ON 22"x34"
SCALE: 1-1/2" = 1'0" ON 11"x17"

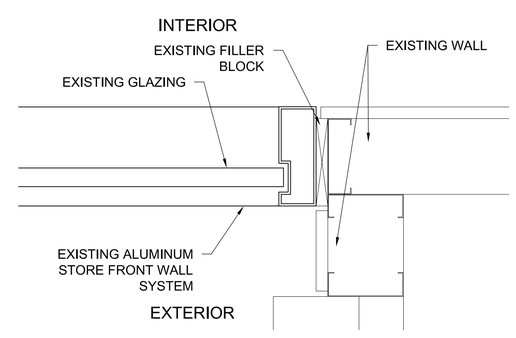

A3 M1.0 EXISTING SILL DETAIL
SCALE: 3" = 1'0" ON 22"x34"
SCALE: 1-1/2" = 1'0" ON 11"x17"

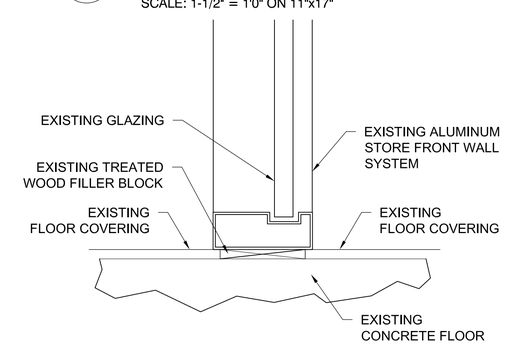

A4 M1.0 EXISTING SILL DETAIL
SCALE: 3" = 1'0" ON 22"x34"
SCALE: 1-1/2" = 1'0" ON 11"x17"

STATE OF ALASKA 49TH JERRY P. HERRING AELM-9287 DECEMBER 20, 2022 REGISTERED PROFESSIONAL ENGINEER

NO.	REVISION	DATE

CENTRAL ALASKA ENGINEERING COMPANY, LLC.
32215 LAKEFRONT DR., SOLDOTNA, AK 99669
PHONE (907) 260-5311 FAX (907) 260-5312
AECL 1481
E-MAIL: JHERRING@AKENGINEER.COM

PROJECT
SOUTH PENINSULA HOSPITAL LOBBY DOORS REPLACEMENT
4300 BARTLETT ST., HOMER, AK 99603

CLIENT
KENAI PENINSULA BOROUGH
KPB PURCHASING & CONTRACTING DEPARTMENT
47140 E POPPY LANE, SOLDOTNA, AK 99669 (907) 714-2260

DESIGN REVIEW DOCUMENTS
DECEMBER 20, 2022

DRAWN:	CHECKED:
BD	JH

SHEET CONTENTS:
AS-BUILT PLAN, ELEVATIONS & DETAILS

CATEGORY: SHEET:
M 1.0

SCALE: AS SHOWN
AutoCAD FILE:sph lobby doors ifc.dwg

ISSUED FOR CONSTRUCTION

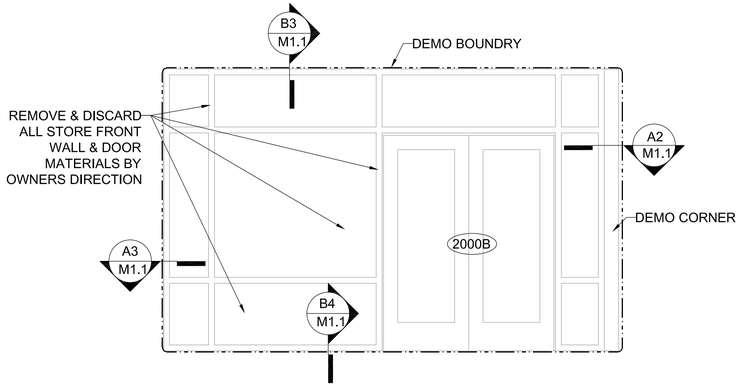

C1 / M1.1 EXISTING INTERIOR DEMO ELEVATION @ 2000B DOOR

SCALE: 3/8" = 1'0" ON 22"x34"
SCALE: 3/16" = 1'0" ON 11"x17"

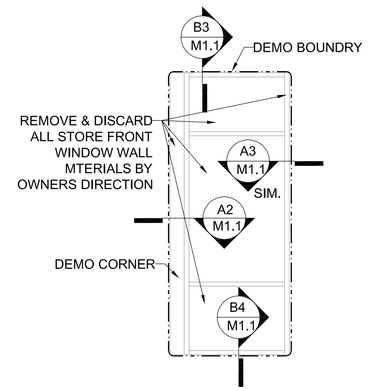

C2 / M1.1 DEMO ELEVATION

SCALE: 3/8" = 1'0" ON 22"x34"
SCALE: 3/16" = 1'0" ON 11"x17"

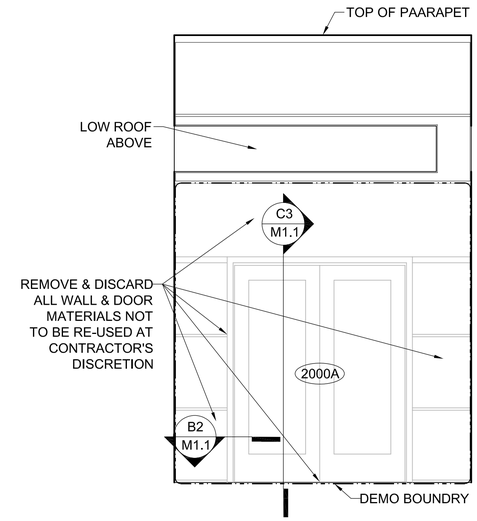

C3 / M1.1 EXISTING EXTERIOR DEMO ELEVATION @ 2000A DOOR

SCALE: 3/8" = 1'0" ON 22"x34"
SCALE: 3/16" = 1'0" ON 11"x17"

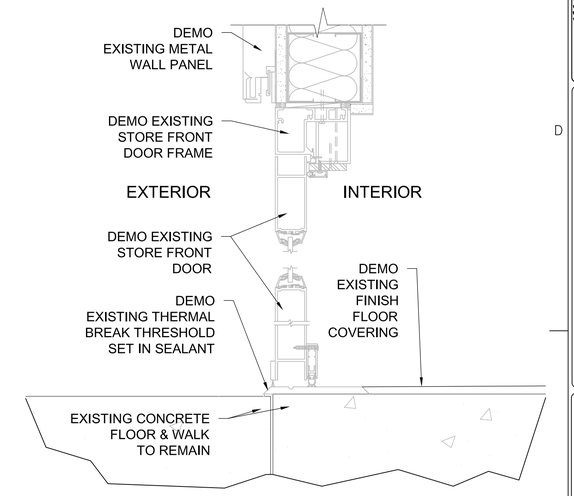

C3 / M1.1 EXISTING HEAD DETAIL & EXISTING SILL DETAIL

SCALE: 3" = 1'0" ON 22"x34"
SCALE: 1-1/2" = 1'0" ON 11"x17"

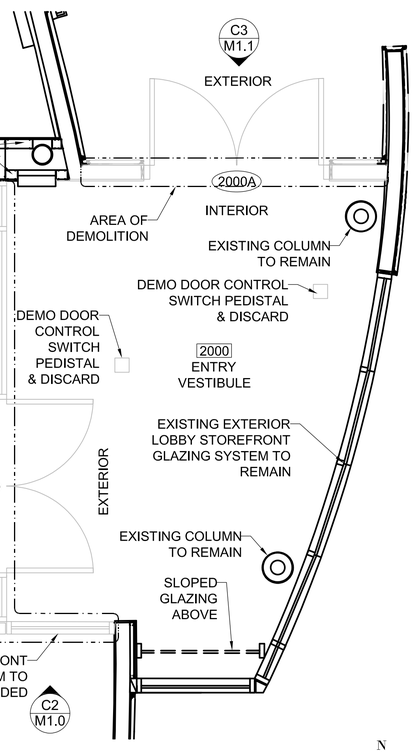

A1 / M1.1 EXISTING ENTRY VESTIBULE PLAN

SCALE: 3/8" = 1'0" ON 22"x34"
SCALE: 3/16" = 1'0" ON 11"x17"

PLAN REF

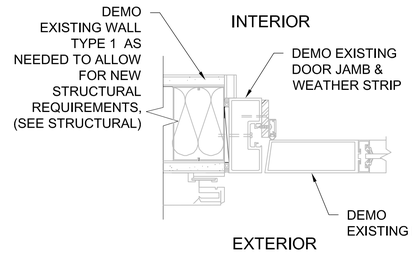

B2 / M1.1 EXISTING JAMB DETAIL

SCALE: 3" = 1'0" ON 22"x34"
SCALE: 1-1/2" = 1'0" ON 11"x17"

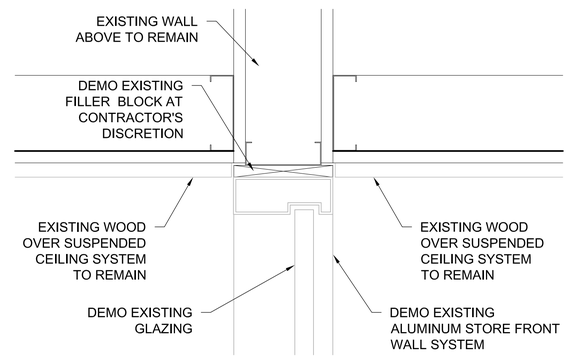

B3 / M1.1 EXISTING HEAD DETAIL

SCALE: 3" = 1'0" ON 22"x34"
SCALE: 1-1/2" = 1'0" ON 11"x17"

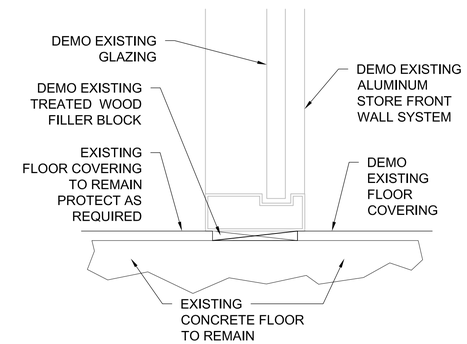

B4 / M1.1 EXISTING SILL DETAIL

SCALE: 3" = 1'0" ON 22"x34"
SCALE: 1-1/2" = 1'0" ON 11"x17"

SHEET NOTES:

1. EXISTING WALL TYPE 1
   5/8" GWB OVER,
   VAPOR RETARDER OVER,
   6" METAL STUDS @ 16" O.C. W/BATT INSUL. OVER,
   GYPSUM SHEATHING OVER,
   AIR INFILTRATION BARRIER OVER,
   METAL WALL PANEL @ EXTERIOR

   REPAIR AND REPAINT ALL INTERIOR SHEETROCK IN THE VESTIBULE. REFER TO SHERWIN-WILLIAMS SPEC

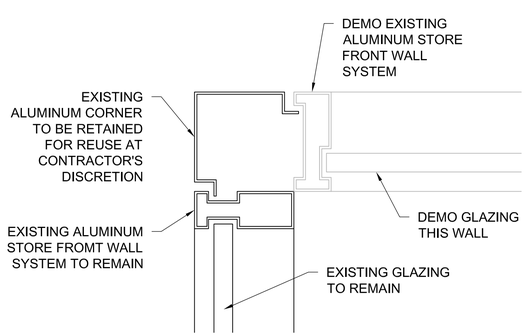

A2 / M1.1 EXISTING CORNER JAMB SECTION

SCALE: 3" = 1'0" ON 22"x34"
SCALE: 1-1/2" = 1'0" ON 11"x17"

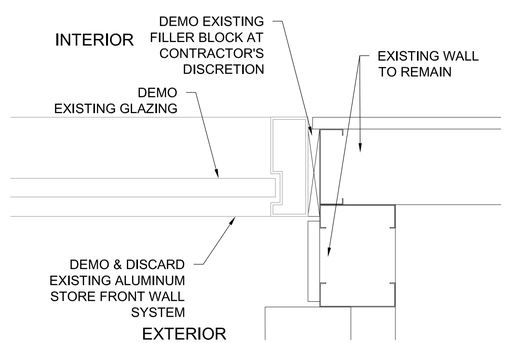

A3 / M1.1 EXISTING SILL DETAIL

SCALE: 3" = 1'0" ON 22"x34"
SCALE: 1-1/2" = 1'0" ON 11"x17"

STATE OF ALASKA 49TH JERRY P. HERRING AELM-9287 DECEMBER 20, 2022 REGISTERED PROFESSIONAL ENGINEER

NO.	REVISION	DATE

CENTRAL ALASKA ENGINEERING COMPANY, LLC.
32215 LAKEFRONT DR., SOLDOTNA, AK 99669
PHONE (907) 260-5311 FAX (907) 260-5312
AECL 1481
E-MAIL: JHERRING@AKENGINEER.COM

PROJECT
SOUTH PENINSULA HOSPITAL LOBBY DOORS REPLACEMENT
4300 BARTLETT ST., HOMER, AK 99603

CLIENT
KENAI PENINSULA BOROUGH
KPB PURCHASING & CONTRACTING DEPARTMENT
47140 E POPPY LANE, SOLDOTNA, AK 99669 (907) 714-2260

DESIGN REVIEW DOCUMENTS
DECEMBER 20, 2022

DRAWN:	CHECKED:
BD	JH

SHEET CONTENTS:
DEMO PLAN & DETAILS

CATEGORY: M SHEET: 1.1

SCALE: AS SHOWN

AutoCAD FILE:sph lobby doors ifc.dwg

ISSUED FOR CONSTRUCTION

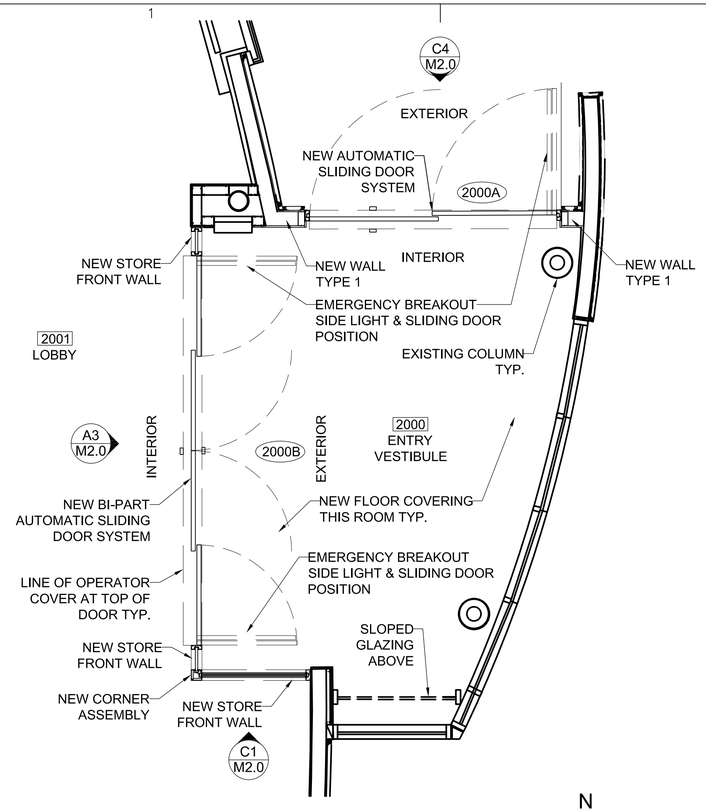

A1 M2.0 NEW ENTRY VESTIBULE PLAN
SCALE: 3/8" = 1'0" ON 22"x34"
SCALE: 3/16" = 1'0" ON 11"x17"

PLAN REF

SHEET NOTES:

1. EXISTING WALL TYPE 1
   5/8" GWB OVER,
   VAPOR RETARDER OVER,
   6" METAL STUDS @ 16" O.C. W/BATT INSUL. OVER,
   GYPSUM SHEATHING OVER,
   AIR INFILTRATION BARRIER OVER,
   METAL WALL PANEL @ EXTERIOR

   REPAIR AND REPAINT ALL INTERIOR SHEETROCK IN THE VESTIBULE. REFER TO SHERWIN-WILLIAMS SPEC 09 91 23 - INTERIOR PAINTING. USE EXTRA WHITE B20 W 1265 FOR THE COLOR.

   REPLACE ALL TILE CARPETING IN THE VESTIBULE WITH PATCRAFT PRADO 10317. REFER TO TILE CARPETING SPEC 09-68-13.

   INSTALL RESILIENT BASE IN THE VESTIBULE. REFER TO RESILIENT BASE AND ACCESSORIES SPEC 09-65-13

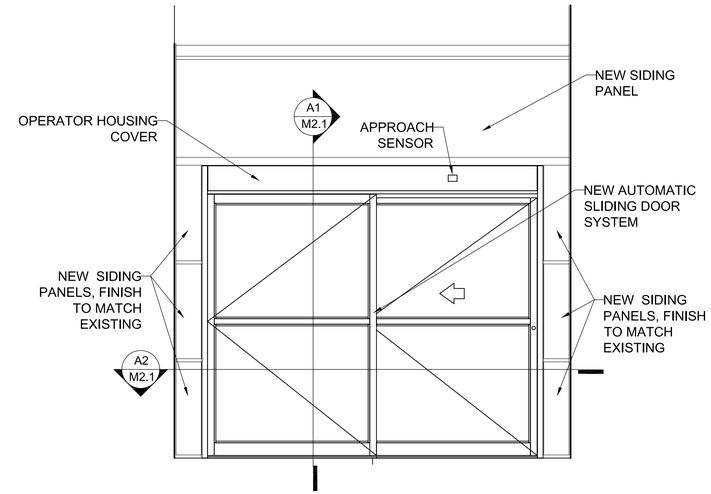

C4 M2.0 NEW EXTERIOR ELEVATION @ 2000A DOOR
SCALE: 1/2" = 1'0" ON 22"x34"
SCALE: 1/4" = 1'0" ON 11"x17"

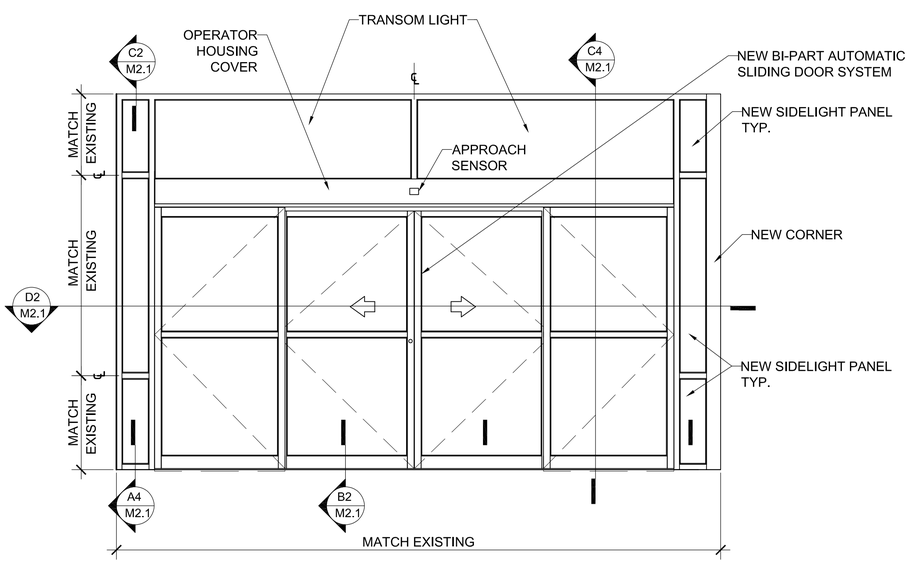

A3 M2.0 VIEW FROM LOBBY
NEW INTERIOR ELEVATION @ 2000B DOOR
SCALE: 1/2" = 1'0" ON 22"x34"
SCALE: 1/4" = 1'0" ON 11"x17"

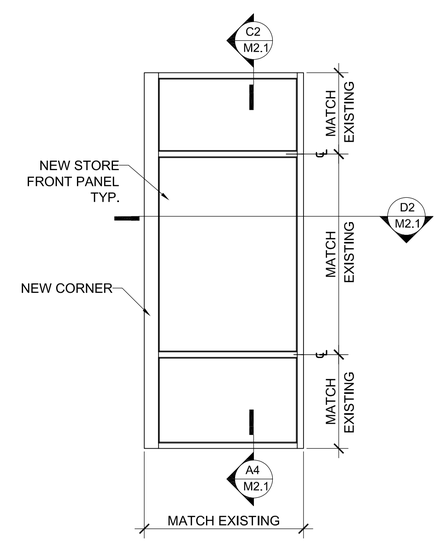

C1 M2.0 VIEW FROM LOBBY
NEW INTERIOR ELEVATION
SCALE: 1/2" = 1'0" ON 22"x34"
SCALE: 1/4" = 1'0" ON 11"x17"

STATE OF ALASKA 49TH
JERRY P. HERRING
AELM-9287
DECEMBER 20, 2022
REGISTERED PROFESSIONAL ENGINEER

NO.	REVISION	DATE

CENTRAL ALASKA ENGINEERING COMPANY, LLC.
32215 LAKEFRONT DR., SOLDOTNA, AK 99669
PHONE (907) 260-5311 FAX (907) 260-5312
AECL 1481
E-MAIL: JHERRING@AKENGINEER.COM

PROJECT
SOUTH PENINSULA HOSPITAL LOBBY DOORS REPLACEMENT
4300 BARTLETT ST., HOMER, AK 99603

CLIENT
KENAI PENINSULA BOROUGH
KPB PURCHASING & CONTRACTING DEPARTMENT
47140 E POPPY LANE, SOLDOTNA, AK 99669 (907) 714-2260

DESIGN REVIEW DOCUMENTS
DECEMBER 20, 2022

DRAWN: BD
CHECKED: JH

SHEET CONTENTS:
NEW DOOR & WALL PLANS & ELEVATIONS

CATEGORY: SHEET:
M 2.0

SCALE: AS SHOWN

AutoCAD FILE: sph lobby doors ifc.dwg

ISSUED FOR CONSTRUCTION

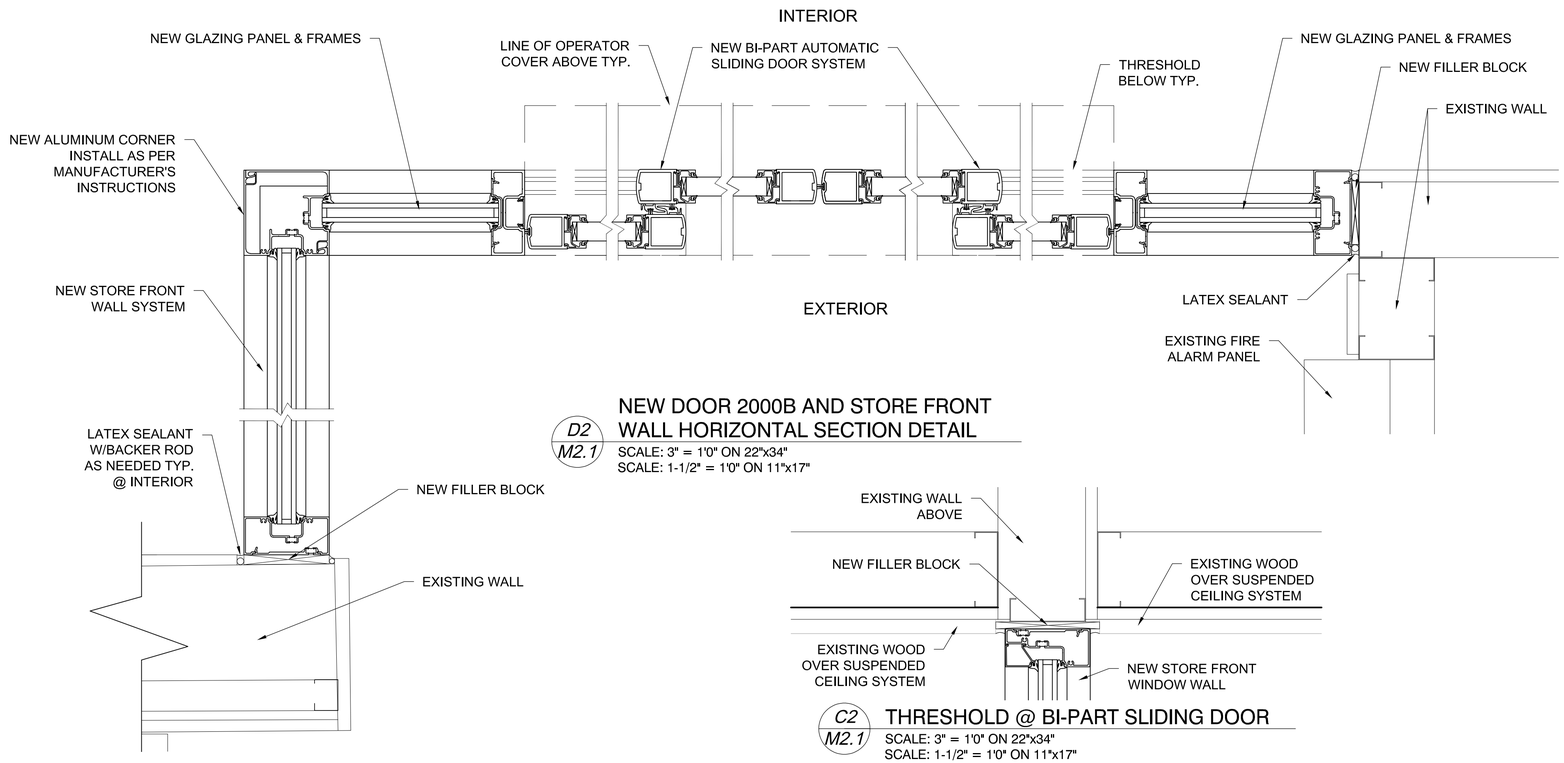

D2 / M2.1 NEW DOOR 2000B AND STORE FRONT WALL HORIZONTAL SECTION DETAIL
SCALE: 3" = 1'0" ON 22"x34"
SCALE: 1-1/2" = 1'0" ON 11"x17"

C2 / M2.1 THRESHOLD @ BI-PART SLIDING DOOR
SCALE: 3" = 1'0" ON 22"x34"
SCALE: 1-1/2" = 1'0" ON 11"x17"

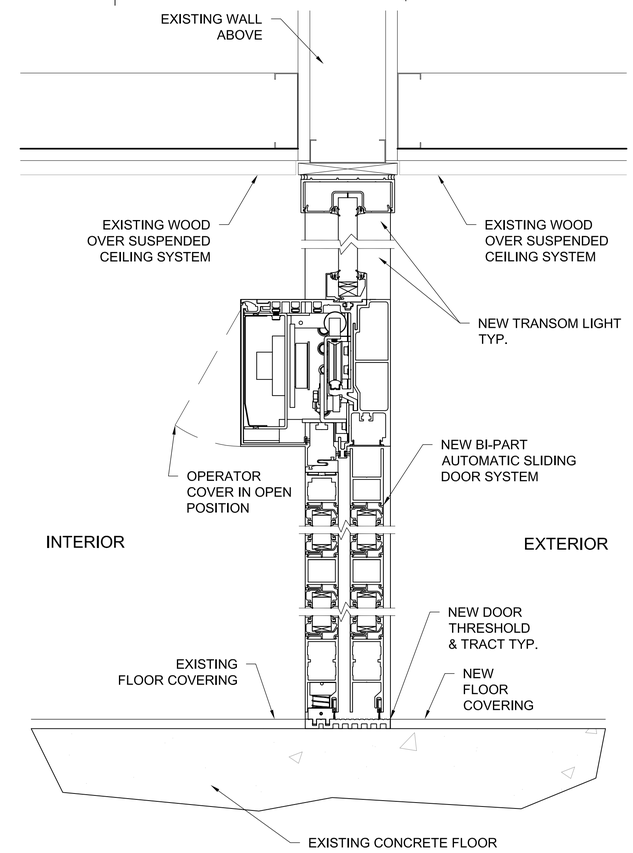

C4 / M2.1 NEW DOOR 2000A VERTICAL SECTION
SCALE: 3" = 1'0" ON 22"x34"
SCALE: 1-1/2" = 1'0" ON 11"x17"

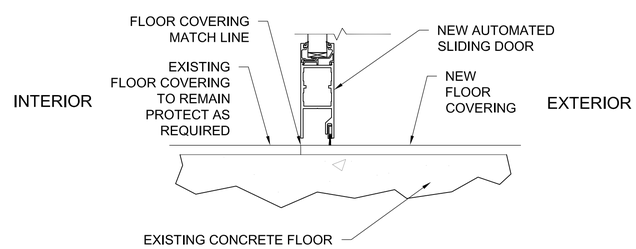

B2 / M2.1 THRESHOLD @ BI-PART SLIDING DOOR
SCALE: 3" = 1'0" ON 22"x34"
SCALE: 1-1/2" = 1'0" ON 11"x17"

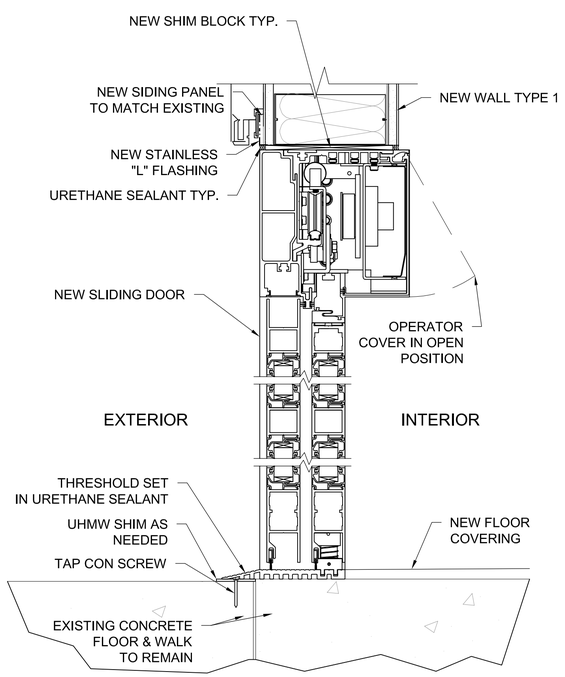

A1 / M2.1 NEW DOOR 2000A VERTICAL SECTION
SCALE: 3" = 1'0" ON 22"x34"
SCALE: 1-1/2" = 1'0" ON 11"x17"

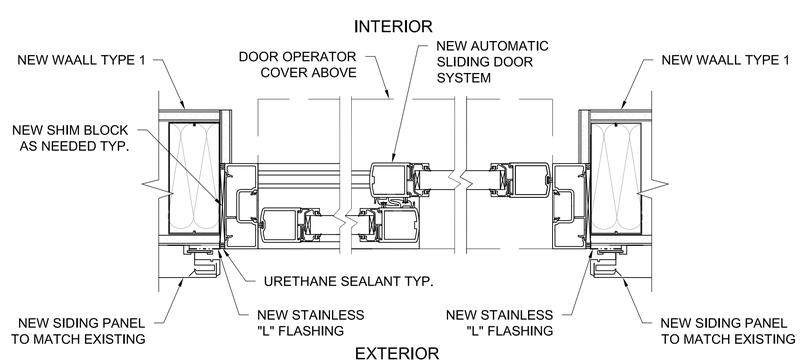

A2 / M2.1 NEW DOOR 2000A HORIZONTAL SECTION
SCALE: 3" = 1'0" ON 22"x34"
SCALE: 1-1/2" = 1'0" ON 11"x17"

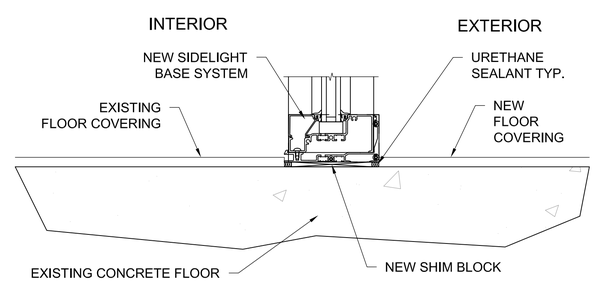

A4 / M2.1 BASE DETAIL @ SIDELIGHT
SCALE: 3" = 1'0" ON 22"x34"
SCALE: 1-1/2" = 1'0" ON 11"x17"

SHEET NOTES:

1. EXISTING WALL TYPE 1
   5/8" GWB OVER,
   VAPOR RETARDER OVER,
   6" METAL STUDS @ 16" O.C. W/BATT INSUL. OVER,
   GYPSUM SHEATHING OVER,
   AIR INFILTRATION BARRIER OVER,
   METAL WALL PANEL @ EXTERIOR
2. ALL NEW GLAZING TO BE 1" OA, INSULATED, SAFETY GLASS

STATE OF ALASKA 49TH JERRY P. HERRING AELM-9287 DECEMBER 20, 2022 REGISTERED PROFESSIONAL ENGINEER

NO.	REVISION	DATE

CENTRAL ALASKA ENGINEERING COMPANY, LLC.
32215 LAKEFRONT DR., SOLDOTNA, AK 99669
PHONE (907) 260-5311 FAX (907) 260-5312
AECL 1481
E-MAIL: JHERRING@AKENGINEER.COM

PROJECT: SOUTH PENINSULA HOSPITAL LOBBY DOORS REPLACEMENT
4300 BARTLETT ST., HOMER, AK 99603

CLIENT: KENAI PENINSULA BOROUGH
KPB PURCHASING & CONTRACTING DEPARTMENT
47140 E POPPY LANE, SOLDOTNA, AK 99669 (907) 714-2260

DESIGN REVIEW DOCUMENTS
DECEMBER 20, 2022

DRAWN: BD | CHECKED: JH

SHEET CONTENTS: NEW STORE FRONT DOOR & WALL DETAILS

CATEGORY: | SHEET: M 2.1

SCALE: AS SHOWN

AutoCAD FILE:sph lobby doors ifc.dwg

NOTES:

1. THE CONTRACTOR SHALL PROVIDE ALL MATERIALS AND LABOR NECESSARY FOR A COMPLETE AND OPERABLE SYSTEM.
2. THE DRAWINGS ARE PARTLY DIAGRAMMATIC, NOT NECESSARILY SHOWING EXACT LOCATIONS UNLESS SPECIFICALLY DIMENSIONED. THE CONTRACTOR SHALL BE RESPONSIBLE FOR COORDINATION WITH OTHER TRADES TO AVOID CONFLICTS IN CONGESTED AREAS.
3. CONFORM TO ALL APPLICABLE CODES, INCLUDING NFPA 70, 2020 EDITION AND LOCAL AMENDMENTS.
4. THE CONTRACTOR SHALL SECURE AND PAY FOR ALL NECESSARY PERMITS AND FEES.
5. ALL WORK PERFORMED UNDER THIS CONTRACT IS TO BE FREE FROM DEFECTS IN MATERIALS AND WORKMANSHIP FOR A PERIOD OF ONE YEAR FROM ACCEPTANCE. ANY FAULTY MATERIALS OR WORKMANSHIP SHALL BE REPAIRED OR REPLACED TO THE SATISFACTION OF THE OWNER DURING THE WARRANTY PERIOD.
6. ALL EQUIPMENT INSTALLED UNDER THIS PROJECT SHALL BE BRACED FOR A SEISMIC EVENT IN ACCORDANCE WITH THE 2018 INTERNATIONAL BUILDING CODE SECTION 1613.
7. ALL MATERIALS SHALL BE NEW AND UNUSED, INSTALLED PER MANUFACTURER'S DIRECTIONS AND IN THE BEST PRACTICE OF THE CRAFT.
8. USE RIGID STEEL CONDUIT WHERE UNDERGROUND OR SUBJECT TO DAMAGE. USE ELECTRICAL METALLIC TUBING OR AC/MC IN INTERIOR LOCATIONS.
9. PROVIDE TRENCH MARKING TAPE FOR ALL BURIED CONDUITS OR CABLES EXTENDING BEYOND BUILDING FOUNDATIONS.
10. FEEDERS AND BRANCH CIRCUITS: COPPER CONDUCTOR, 600 VOLT INSULATION, THHN/THWN FOR HEATED AREAS, XHHW FOR NONHEATED AREAS.
11. DO NOT INSTALL THERMOPLASTIC CONDUCTORS WHEN TEMPERATURE IN WORK AREA IS BELOW 20 DEGREES F.
12. PROVIDE A GROUND WIRE IN ALL CONDUITS CONTAINING LINE VOLTAGE.
13. CONVENIENCE RECEPTACLE CONFIGURATION: NEMA WD 1; TYPE 5 20 R, WHITE PLASTIC FACE. GFCI RECEPTACLES: DUPLEX CONVENIENCE RECEPTACLE WITH INTEGRAL CLASS A GROUND FAULT CURRENT INTERRUPTER U.L. NO. 493 LISTED.
14. DECORATIVE COVER PLATE: WHITE SMOOTH PLASTIC.
15. ELECTRICAL BOX LOCATIONS SHOWN ON CONTRACT DRAWINGS ARE APPROXIMATE UNLESS DIMENSIONED. VERIFY LOCATION OF SWITCHES AND OUTLETS PRIOR TO ROUGH IN. UNLESS OTHERWISE NOTED, MOUNT OUTLETS AT THE FOLLOWING HEIGHTS FROM FINISHED FLOOR TO CENTER LINE OF OUTLET:

WALL SWITCHES		3'8"
CONVENIENCE OUTLETS	NON ADA:	1'2" ADA: 1'6"
WEATHERPROOF CONVENIENCE OUTLETS		2'6"
TELEPHONE OUTLETS	NON ADA:	1'2" ADA: 1'6"
PUBLIC TELEPHONE OUTLET		3'8"

SPECIAL EQUIPMENT: AS NOTED ON DRAWINGS.

16. LABELING: PROVIDE A TYPED CIRCUIT DIRECTORY FOR EACH BRANCH CIRCUIT PANELBOARD AND SWITCHBOARD. USE A PENCIL TO LABEL SPARE CIRCUIT BREAKERS. FOR PANELBOARDS, NUMBER CIRCUITS WITH ODD NUMBERS ON THE LEFT, EVEN NUMBERS ON THE RIGHT, ONE NUMBER FOR EVERY POLE. EVERY CIRCUIT SHALL HAVE A UNIQUE DESCRIPTION THAT CLEARLY IDENTIFIES THE LOAD SERVED. PROVIDE A NAME PLATE IDENTIFYING THE PANEL NAME. EVERY SWITCHBOARD AND PANEL SHALL HAVE A NAMEPLATE IDENTIFYING THE SOURCE OF POWER THAT SUPPLIES IT.

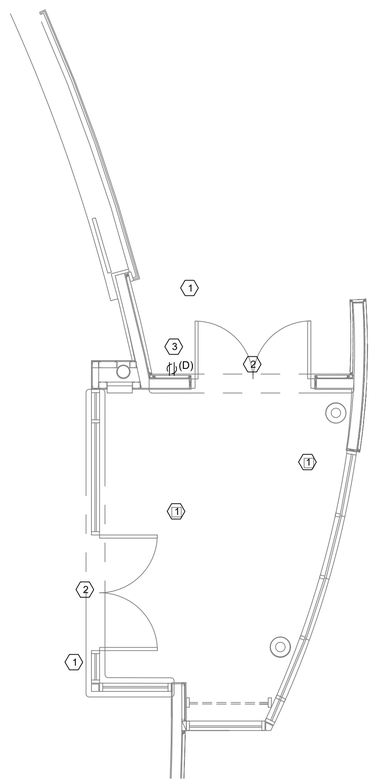

1 DEMOLITION FLOOR PLAN

SCALE: 1"=4'-0" (PRINTED ON 22X34)

SCALE: 1" = 4' 0"

0 4 8

DRAWING NOTES:

1. DEMOLISH EXISTING DOOR OPENER. TYPICAL OF 4.
2. DEMOLISH EXISTING DOOR OPENER. REUSE CIRCUIT FOR NEW DOOR OPENER. FIELD VERIFY CIRCUIT, BELIEVED TO BE 2LLB-8. TYPICAL OF 2.
3. MOVE EXISTING RECEPTACLE AS SHOWN. FIELD VERIFY CIRCUIT, BELIEVED TO BE 2NLB-67.
4. CONNECT NEW DOOR OPENERS TO EXISTING CIRCUITS. FIELD VERIFY CIRCUIT, BELIEVED TO BE 2LLB-8. TYPICAL OF 2.
5. RUN CAT-6 CABLE FROM SECURITY ROOM TO DOOR OPENER. COORDINATE WITH MAINTENANCE FOR TERMINATIONS. CABLE LENGTH IS APPROXIMATELY 150 FEET. THE ENTIRE RUN HAS A DROPPED ACOUSTICAL TILE CEILING. TYPICAL OF 2.

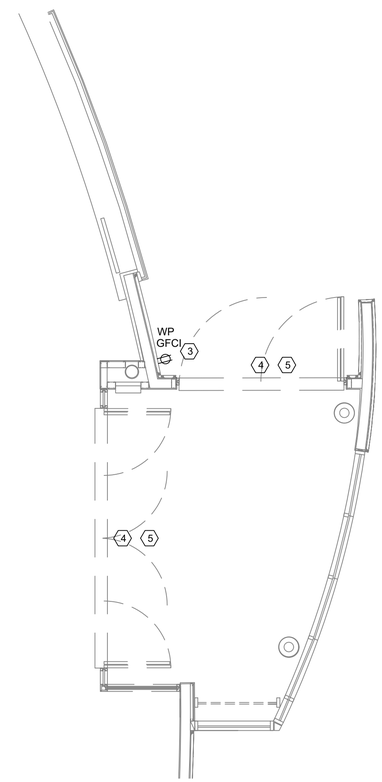

2 POWER FLOOR PLAN

SCALE: 1"=4'-0" (PRINTED ON 22X34)

SCALE: 1" = 4' 0"

0 4 8

Northern Electrical Engineering Consulting, LLC
AECL 1267

8410 FOXLAIR CIRCLE
ANCHORAGE, AK 99507
PHONE (907) 562-1552
JAMESGWYNN@GCI.NET

STATE OF ALASKA 49TH
JAMES JS GWYNN
AELE 14379
12/18/2022
REGISTERED PROFESSIONAL ENGINEER

DESIGN:	JSG
DRAWN:	JSG
APPROVED:	JSG
DATE:	12/18/2022

REVISIONS

NO.	DATE	BY

SOUTH PENINSULA HOSPITAL
LOBBY DOOR REPLACEMENT
HOMER, ALASKA

ELECTRICAL
POWER & COMM

E1.0

PROJECT DESIGN CRITERIA

DESIGN DATA

CODE: IBC 2012 AND ASCE 7–10

DEAD LOADS:

ROOF 80 PSF (6" CONC SLAB + FRAMING)

LIVE LOADS:

ROOF 20 PSF

SNOW LOADS:

P_g = 57 PSF (Homer)

C_e = 1.0 (Exposure B)

C_t = 1.1 (Ventilated Roof)

I_s = 1.20

P_f = 52.7 PSF

C_s = 1.0 (Flat Roof)

LEEWARD DRIFT = 2FT @ 21.4 PSF = 42.8 PSF

P_s = 95.5 PSF

WIND LOADS:

RISK CATEGORY: IV

WIND SPEED: 158 MPH

EXPOSURE: C (ALL DIRECTIONS)

SEISMIC LOADS : SITE CLASS D, SEISMIC DESIGN CATEGORY D

Ss = 1.50g

S1 = 0.60g

Sms = 1.50g

Sm1 = 0.90g

Sds = 1.00g

Sd1 = 0.60g

T = 0.23 sec

R = 7.0

OCCUPANCY CATEGORY IV

CONCRETE ANCHORING

EXISTING CONCRETE F'_c = 2,500 PSI, CRACKED CONDITION ASSUMED

BONDING ADHESIVE – HILTI

STRUCTURAL STEEL

STRUCTURAL PLATE AND ROLLED SECTIONS – ASTM A992 GR. 50 (50 KSI)

TUBULAR SECTIONS – A500 GR. B (46 KSI)

ANCHOR RODS – ASTM A307

LIGHT GAGE METAL STUD AND TRACKS

TRACK AND STUDS – ASTM A446 GR. D (40 KSI)

WELDING

WELDING SHALL BE IUN ACCORDANCE WITH AWS D1.1 AND PERFORMED BY QUALIFIED WELDERS. ELECTRODES SHALL BE E70XXX OR OTHER DEVELOPING F_t=72KSI.

WOOD

TEMPORARY SHORING POSTS AND PADS – DF NO. 1 OR BETTER

ABBREVIATIONS

AAD	ADHESIVE ANCHORAGE DEVICE
AB	ANCHOR BOLT
AC	ASPHALT CONCRETE
Alt	ALTERNATE
APA	AMERICAN PLYWOOD ASSOCIATION
APC	ALTERNATIVE PIPE CULVERT
Bldg	BUILDING
Blkg	BLOCKING
BN	BOUNDARY NAILING
Btm	BOTTOM
CB	CARRIAGE BOLT
CIDH	CAST IN DRILLED HOLE
CJ	CONTROL JOINT
Clr	CLEAR
CMU	CONCRETE MASONRY UNIT
Conc	CONCRETE
Const	CONSTRUCTION
Cont	CONTINUOUS
CP	COMPLETE PENETRATION WELD
Dbl	DOUBLE
DF	DOUGLAS FIR
Dia	DIAMETER
DIP	DUCTILE IRON PIPE
DN	DIAMETER NOMINAL
do	DITTO
(E)	EXISTING
Ea	EACH
EL	ELEVATION
Elec	ELECTRICAL
Embed	EMBEDMENT
EN	EDGE NAIL
Eq	EQUAL
Exp	EXPANSION
FDGM	FREE DRAINING GRANULAR MATERIAL
FG	FINISH GRADE
FL	FLOW LINE
Flr	FLOOR
FN	FACE (FIELD) NAIL
FOC	FACE OF CONCRETE
FOM	FACE OF MASONRY
FOS	FACE OF STUD
FS	FAR SIDE
Ftg	FOOTING
Ga	GAGE
Galv	GALVANIZED
GLM	GLUE LAMINATED MEMBER
Gyp Bd	GYPSUM BOARD
HD	HOLDOWN
Hex	HEXAGON
Horiz	HORIZONTAL
HSB	HIGH STRENGTH BOLT
HSS	HOLLOW STRUCTURAL SECTION
Jt	JOINT
LOL	LAYOUT LINE
LVL	LAMINATED VENEER LUMBER
m	METER
Max	MAXIMUM
MEA	MECHANICAL EXPANSION ANCHOR
Mech	MECHANICAL
Mfr	MANUFACTURER
mm	MILLIMETER
Min	MINIMUM
MIW	MALLEABLE IRON WASHER
NS	NEAR SIDE
OC	ON CENTER
OG	ORIGINAL GRADE
OH	OPPOSITE HAND
Opt	OPTIONAL
P	PITCH
PDF	POWER DRIVEN FASTENER
Plwd	PLYWOOD
PL	PLATE
PT	PRESSURE TREATED
PWB	PREFABRICATED WOOD I BEAM
RCP	REINFORCED CONCRETE PIPE
Reinf	REINFORCED, REINFORCING
Req'd	REQUIRED
SDSTS	SELF DRILL, SELF TAP SCREW
Sim	SIMILAR
SPS	STRUCTURAL PLYWOOD SHEATHING
Sq	SQUARE
Stagg	STAGGERED
Std	STANDARD
SW	STUD WELD
Sym	SYMMETRICAL
T&B	TOP AND BOTTOM
T&G	TONGUE–AND–GROOVE
TN	TOE NAIL
TS	TUBE STEEL
Tot	Total
Typ	TYPICAL
UON	UNLESS OTHERWISE NOTED
Vert	VERTICAL

SYMBOLS

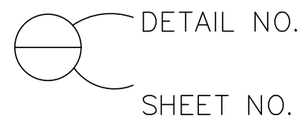

CONSTRUCTION NOTES

1. SPECIAL INSPECTIONS SHALL BE PERFORMED FOR THE FOLLOWING ITEMS OF WORK:
   - 1.1. STRUCTURAL STEEL SHOP FABRICATION – SHOP DRAWING REVIEW
   - 1.2. FIELD WELDING – INSTALLATION
   - 1.3. DRILLED HOLES IN CONCRETE FOR ANCHOR RODS – INSTALLATION
   - 1.4. TEMPORARY SHORING POST AND PAD AND STABILIZING ATTACHMENTS TO BEAM AND CONCRETE SLABS – SHOP DRAWING REVIEW AND INSTALLATION.
   - 1.5. ADDITIONAL INSPECTIONS PER IBC 1702 AND AS REQUESTED BY THE OWNER.
2. THE CONTRACTOR SHALL VERIFY ALL CONTROLLING FIELD DIMENSIONS THAT MAY AFFECT THE MEANS AND METHODS UTILIZED TO COMPLETE THE WORK AND BEFORE ORDERING OR FABRICATING ANY MATERIALS USED IN THE WORK.

BISHOP ENGINEERING, LLC

PO BOX 2501 HOMER, ALASKA 99603-2501

(907) 299-7609

JBISHOP@BISHOP-ENGINEERING.COM

SOUTH PENINSULA HOSPITAL
ENTRY DOOR RECONSTRUCTION
4300 BARLETT ST
HOMER, ALASKA
CONSTRUCTION DOCUMENTS

Revisions:

STATE OF ALASKA 49TH John S. Bishop SE 14298 12/14/2022 REGISTERED STRUCTURAL ENGINEER

Date: 12/14/2022

Drawn: SNC

Checked: JSB

Project: 2022128

File Name: 2022128.DWG

Sheet Title: DESIGN NOTES

Sheet: S0.1

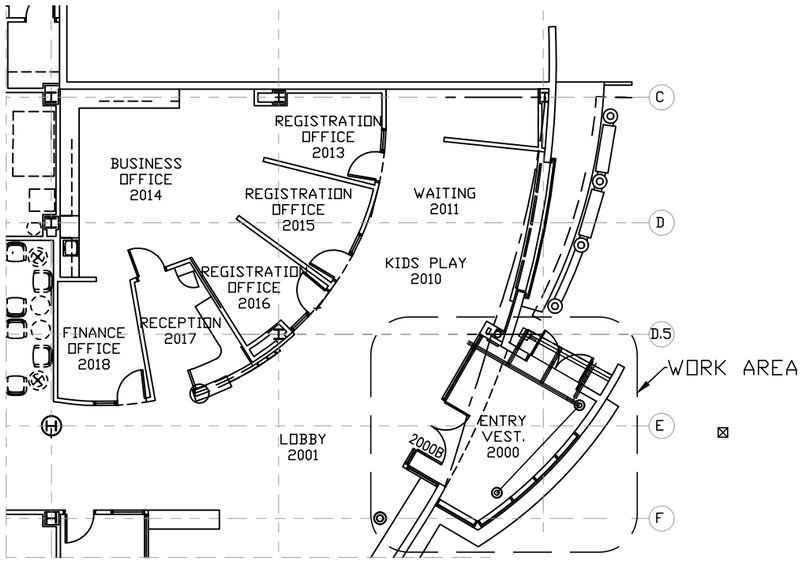

PROJECT LOCATION

3/16" = 1'-0"

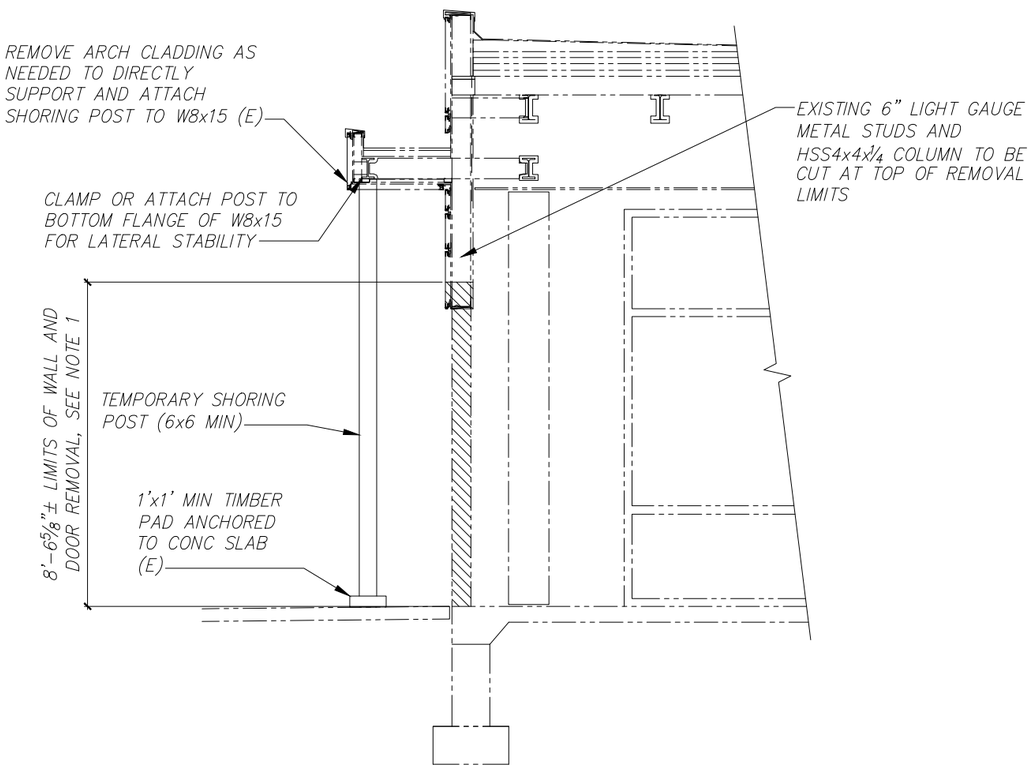

A DEMOLITION AND SHORING SECTION

3/8" = 1'-0"

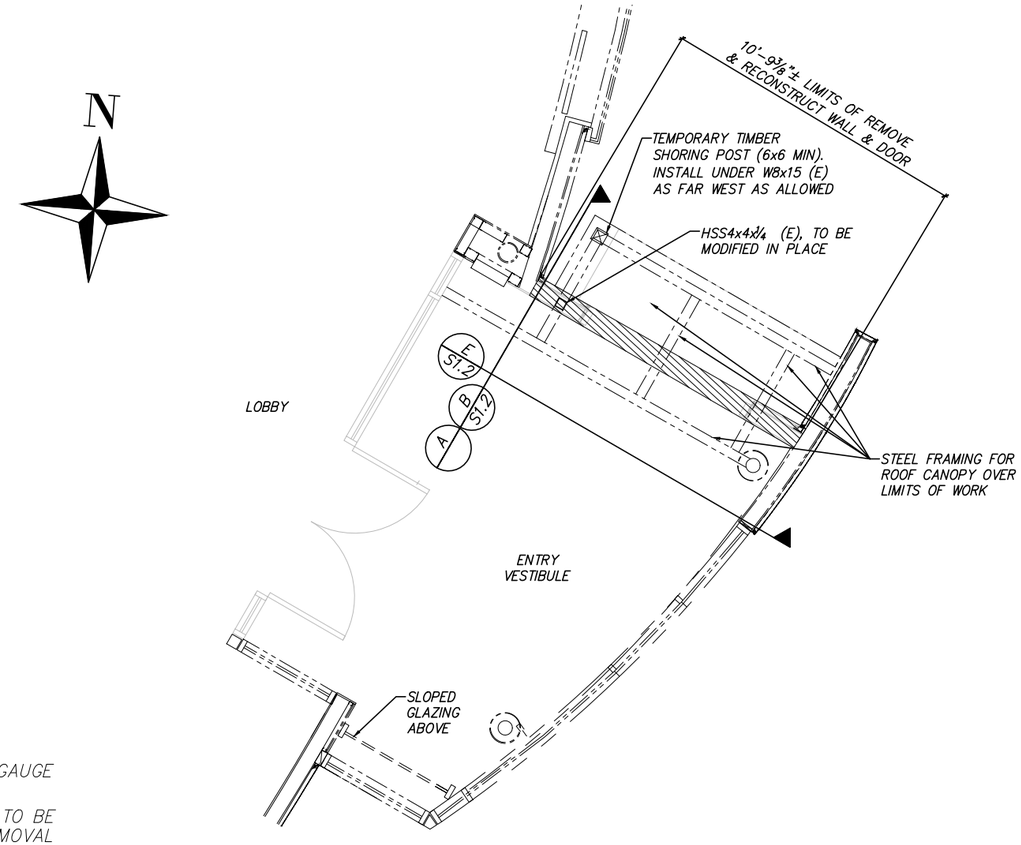

WORK AREA PLAN

3/8" = 1'-0"

LEGEND

DENOTES LIMITS OF REMOVAL OF EXISTING DOOR AND PORTION OF WALL.

NOTES:

1. CONTRACTOR SHALL REMOVE EXISTING DOOR AND PORTIONS OF WALL NECESSARY TO INSTALL NEW STRUCTURAL STEEL MEMBERS AND PROVIDE THE REQUIRED DOOR PACKAGE WIDTH AND HEIGHTS WITH REQUIRED SHIM SPACE ALLOWANCE. REVIEW NEW DOOR CUT SHEETS OR SHOP PLANS FOR PACKAGE DIMENSIONS AND REQUIRED SHIM ALLOWANCE.

2. LOADS FOR SHORING POST AND PAD DESIGN ARE:
   DEAD LOAD = 600 LBS
   ROOF LIVE LOAD = 150 LBS
   SNOW LOAD = 720 LBS

3. CONTRACTOR SHALL VERIFY ALL CONTROLLING FIELD DIMENSIONS BEFORE ORDERING OR FABRICATING ANY MATERIALS.

0 1" 2"

BISHOP ENGINEERING, LLC
PO BOX 2501 HOMER, ALASKA 99603-2501
(907) 299-7609
JBISHOP@BISHOP-ENGINEERING.COM

SOUTH PENINSULA HOSPITAL
ENTRY DOOR RECONSTRUCTION
4300 BARLETT ST
HOMER, ALASKA
CONSTRUCTION DOCUMENTS

Revisions:

STATE OF ALASKA 49TH
John S. Bishop
SE 14298
12/14/2022
REGISTERED STRUCTURAL ENGINEER

Date: 12/14/2022
Drawn: SNC
Checked: JSB
Project: 2022128
File Name: 2022128.DWG

Sheet Title: DEMOLITION PLAN

Sheet: S1.1

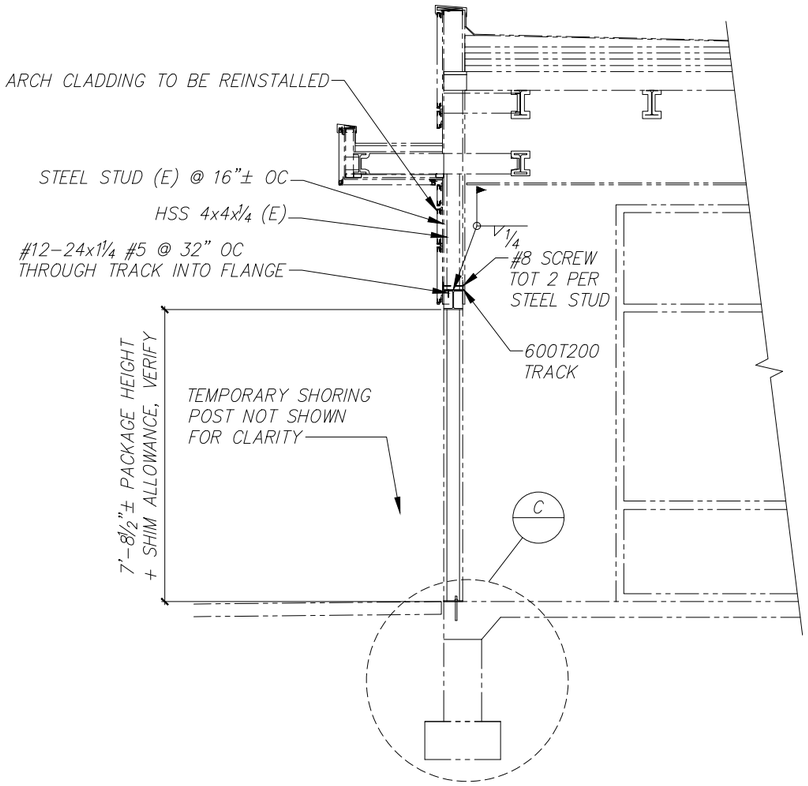

B / S1.1 WALL RECONSTRUCTION SECTION

1/2" = 1'-0"

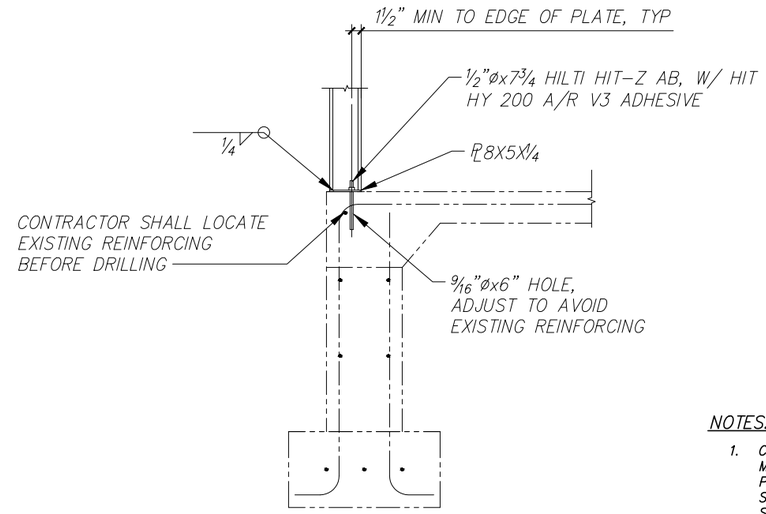

C COLUMN BASE DETAIL

1" = 1'-0"

NOTES:

1. CONTRACTOR SHALL INSTALL NEW STEEL FRAMING MEMBERS TO PROVIDE THE REQUIRED DOOR PACKAGE WIDTH AND HEIGHTS WITH REQUIRED SHIM SPACE ALLOWANCE. REVIEW NEW DOOR CUT SHEETS OR SHOP PLANS FOR PACKAGE DIMENSIONS AND REQUIRED SHIM ALLOWANCE.
2. CONTRACTOR SHALL VERIFY ALL CONTROLLING FIELD DIMENSIONS BEFORE ORDERING OR FABRICATING ANY MATERIALS.
3. WALL STUD ATTACHMENTS ARE (4) #10-16 SCREWS.ATTACH TO WIDE FLANGE W/600T200 TRACK

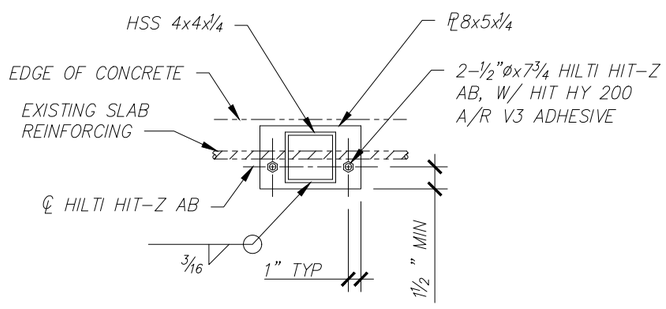

D COLUMN BASE PLAN

2" = 1'-0"

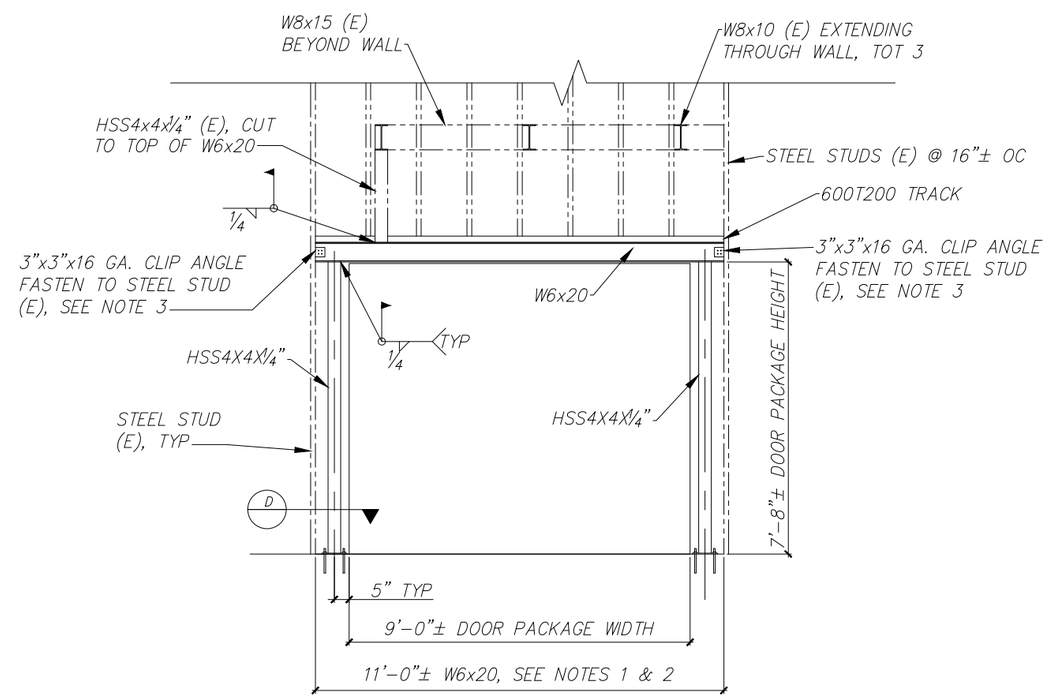

E / S1.1 WALL RECONSTRUCTION SECTION

1/2" = 1'-0"

0 1" 2"

BISHOP ENGINEERING, LLC
PO BOX 2501 HOMER, ALASKA 99603-2501
(907) 299-7609
JBISHOP@BISHOP-ENGINEERING.COM

SOUTH PENINSULA HOSPITAL
ENTRY DOOR RECONSTRUCTION
4300 BARLETT ST
HOMER, ALASKA
CONSTRUCTION DOCUMENTS

Revisions:

STATE OF ALASKA 49TH John S. Bishop SE 14298 12/14/2022 REGISTERED STRUCTURAL ENGINEER

Date: 12/14/2022
Drawn: SNC
Checked: JSB
Project: 2022128
File Name: 2022128.DWG

Sheet Title: STRUCTURE DETAILS

Sheet: S1.2

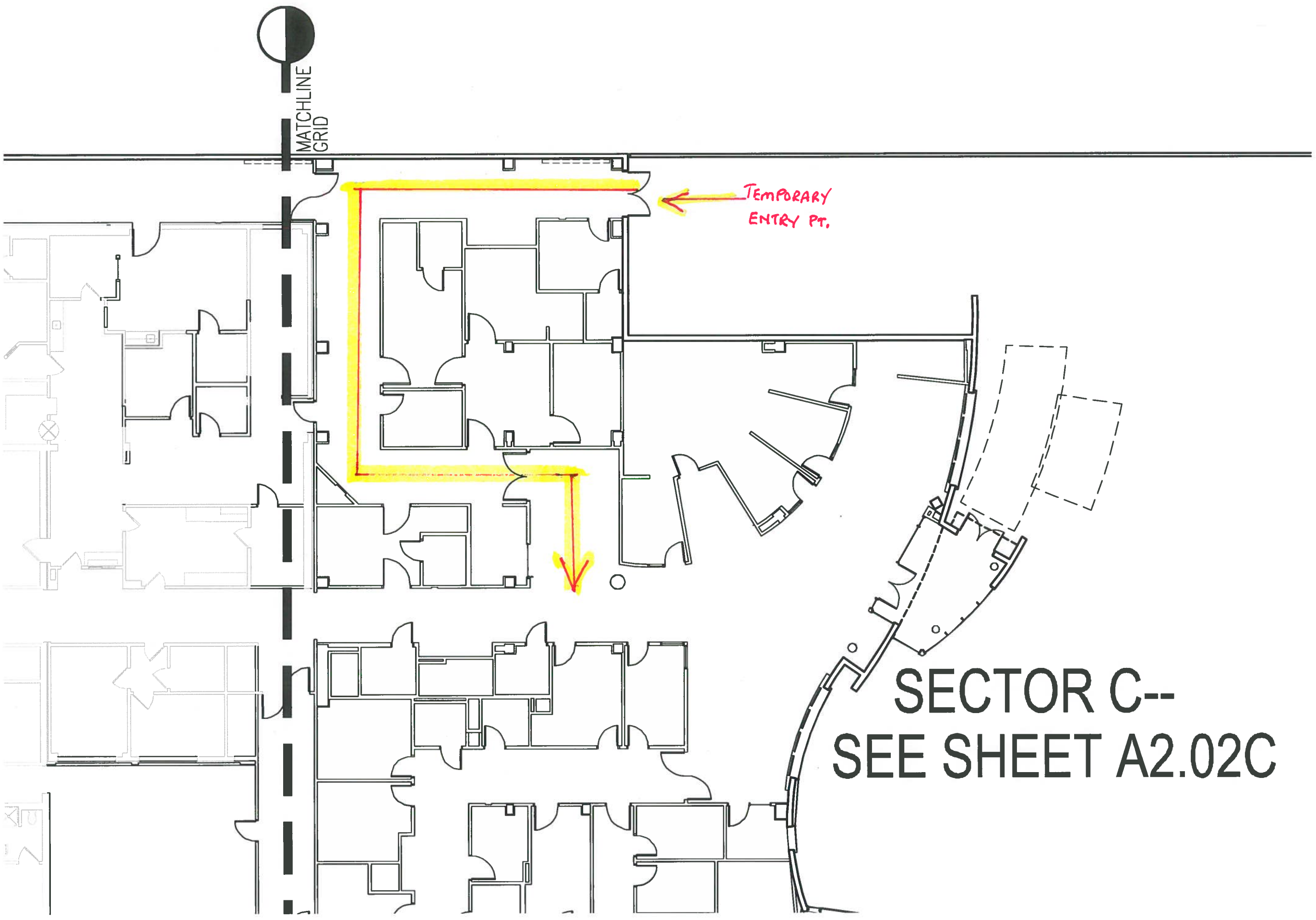
MATCHLINE GRID
TEMPORARY ENTRY PT.
SECTOR C--
SEE SHEET A2.02C

FINISH SCHEDULE

ROOM NO.	ROOM OR SPACE NAME	FLOOR	BASE	NORTH WALL		EAST WALL		SOUTH WALL		WEST WALL		CEILING		NOTES
				MAT	FINISH	MAT	FINISH	MAT	FINISH	MAT	FINISH	MAT	FINISH	
	FINISH SCHEDULE LVL-1													
~~1001~~	~~LOADING DOCK~~	-	-	-	-	-	-	-	-	-	-	-	-	
1003	CORRIDOR	CONC/S	RB-1	GWB	PT-1	GWB	PT-1	GWB	PT-1	GWB	PT-1	ACT-2	FF	
1004	BIOHAZZARD ROOM	CONC/S	RB-1	GWB	PT-1	GWB	PT-1	GWB	PT-1	GWB	PT-1	EXP	PT-1	
1200	CORRIDOR	CONC/S	RB-1	GWB	PT-1	GWB	PT-1	GWB	PT-1	GWB	PT-1	ACT-2	FF	
1201	CORRIDOR	CONC/S	RB-1	GWB	PT-1	GWB	PT-1	GWB	PT-1	GWB	PT-1	ACT-2	FF	
1210	DIETARY STORAGE	CONC/S	RB-1	GWB	PT-1	GWB	PT-1	GWB	PT-1	GWB	PT-1	ACT-2	FF	
1212	SPRINKLER	CONC/S	RB-1	GWB	PT-1	(E)	PT-1	(E)	PT-1	(E)	PT-1	EXP.	PT-1	
1213	MAT MGMT OFFICE SUPPLY/- WORK	(E)	(E)	(E)	PT-1	(E)	PT-1	(E)	PT-1	(E)	PT-1	(E)	-	
1301	(HSKPG CLOSET)	(E)	(E)	(E)	PT-1	(E)	PT-1	(E)	PT-1	(E)	PT-1	(E)	-	
1504	STORAGE	CONC(E)	RB-1	(E)	PT-1	(E)	PT-1	GWB	PT-1	(E)	PT-1	ACT-2	FF	
~~1604~~	~~BOILER ROOM~~	CONC/S	RB-1	(E)	PT-1	(E)	PT-1	(E)	PT-1	GWB	PT-1	EXP	PT-1	
1605	BOILER ROOM	CONC/S	RB-1	CONC	PT-1	GWB	PT-1	CONC/GWB	PT-1	CONC	PT-1	EXP	PT-1	
1701	MATERIALS MANAGEMENT	CONC/S	RB-1	GWB	PT-1	GWB	PT-1	GWB	PT-1	GWB	PT-1	EXP	PT-1	
1702	OPEN OFFICE	CONC/S	RB-1	GWB	PT-1	GWB	PT-1	GWB	PT-1	GWB	PT-1	EXP	PT-1	
1703	COMM. ROOM	SDT	RB-1	GWB	PT-1	GWB	PT-1	GWB	PT-1	GWB	PT-1	EXP	PT-1	
1704	ELEC. ROOM	SDT	RB-1	GWB	PT-1	GWB	PT-1	GWB	PT-1	GWB	PT-1	EXP	PT-1	
1705	SHREDDER ROOM	CONC/S	RB-1	GWB	PT-1	GWB	PT-1	GWB	PT-1	GWB	PT-1	EXP	PT-1	
1706	OXYGEN GENERATION	CONC/S	RB-1	GWB	PT-1	GWB	PT-1	GWB	PT-1	GWB	PT-1	EXP	PT-1	
1707	OXYGEN STORAGE	CONC/S	RB-1	GWB	PT-1	GWB	PT-1	GWB	PT-1	GWB	PT-1	EXP	PT-1	
1708	GAS STORAGE	CONC/S	RB-1	GWB	PT-1	GWB	PT-1	GWB	PT-1	GWB	PT-1	EXP	PT-1	
	FINISH SCHEDULE LVL-2													
2000	ENTRY VEST	WOM-1	WD	GWB	PT-2	GWB	PT-2	GWB	PT-2	GWB	PT-2	GWB	PT-1	
2001	LOBBY	WOM-1/ST-1 CPT-1	WD	GWB	PT-5	GWB	PT-1	GWB	PT-1	GWB	PT-1	GWB/AWC	PT-1,4/FF	1,2
2002	CORRIDOR	ST-1	WD	GWB	PT-1	GWB	PT-1	GWB	PT-1	GWB	PT-1	AWC	FF	
2003	PHONE ALCOVE	ST-1	WD	-	-	GWB	PT-1	GWB	ST-1/PT-2	GWB	PT-1	GWB	PT-1	
2004	H.C. TOILET	SV-5	SV-5	GWB	CT-3/PT-3	GWB	CT-3/PT-3	GWB	CT-3/PT-3	GWB	CT-3/PT-3	GWB	PT-1	5
2005	H.C. TOILET	SV-5	SV-5	GWB	CT-3/PT-3	GWB	CT-3/PT-3	GWB	CT-3/PT-3	GWB	CT-3/PT-3	GWB	PT-1	5
2010	KIDS PLAY	CPT-1	WD	-	-	GWB	PT-1	GWB	PT-1	-	-	AWC	FF	
2011	WAITNG	ST-1/CPT-1	WD	GWB	PT-1	GWB	PT-1	-	-	GWB	PT-5	GWB/AWC	PT-4/FF	1,2
2012	VEND	ST-1/CPT-1	WD	GWB	PT-1	GWB	PT-1	GWB	PT-1	GWB	PT-5	GWB/AWC	PT-4/FF	1,2
2013	REGISTRATION OFFICE	CPT-1	RB-1	GWB	PT-1	GWB	PT-5	GWB	PT-5	-	-	ACT/GWB	FF/PT-1	2
2014	BUSINESS OFFICE	CPT-1	RB-1	GWB	PT-1	-	-	GWB	PT-5	GWB	PT-1	ACT	FF	
2015	REGISTRATION OFFICE	CPT-1	RB-1	GWB	PT-5	GWB	PT-5	GWB	PT-5	-	-	ACT/GWB	FF/PT-4	2
2016	REGISTRATION OFFICE	CPT-1	RB-1	GWB	PT-5	GWB	PT-5	GWB	PT-5	-	-	ACT/GWB	FF/PT-4	2
2017	RECEPTION	CPT-1	WD	GWB	PT-5	GWB	PT-5	-	-	GWB	PT-5	GWB/AWC	PT-4/FF	2
2018	FINANCE OFFICE	CPT-1	RB-1	GWB	PT-1	GWB	PT-5	GWB	PT-5	GWB	PT-5	ACT/GWB	FF/PT-4	2
2019	WAITNG	ST-1/CPT-1	WD	-	-	GWB	PT-1	GWB	PT-5	GWB	PT-1	GWB/AWC	PT-1/FF	1,2
2020	SECURITY	ST-1/CPT-1	WD	GWB	PT-1	GWB	PT-1	GWB	PT-2	GWB	PT-1	ACT	FF	1
2100	CORRIDOR	RBR-1,3	RB-1	GWB	PT-1	GWB	PT-1	GWB	PT-5	-	-	ACT	FF	1
2101	CORRIDOR	RBR-1,3	RB-1	GWB	PT-1	GWB	PT-5	GWB	PT-1	GWB	PT-1	ACT	FF	1
2102	ALCOVE	RBR-1	RB-1	GWB	PT-1	-	-	GWB	PT-1	GWB	PT-1	GWB	PT-1	
2103	ALCOVE	RBR-2	RB-1	-	-	GWB	PT-1	GWB	PT-1	GWB	PT-1	GWB	PT-1	
2104	PASSAGE	RBR-1	RB-1	GWB	PT-1	GWB	PT-1	-	-	GWB	PT-5	ACT	FF	
2105	CORRIDOR	RBR-1,2,3	RB-1	GWB	PT-1	GWB	PT-1	GWB	PT-1	GWB	PT-1	ACT/GWB	FF/PT-4,6	1,2
2106	NURSE STATION	RBR-1,2,3	RB-1	GWB	PT-5	GWB	PT-5	-	-	-	-	ACT/GWB	FF/PT-4	1,2
2110	TRIAGE	SV-2	SV-2	GWB	PT-1	GWB	PT-1	GWB	PT-1	GWB	PT-1	ACT	FF	
2111	CLEAN SUPPLY	SV-4	SV-4	GWB	PT-1	GWB	PT-1	GWB	PT-1	GWB	PT-1	ACT-2	FF	
2112	CONSULT	CPT-1	RB-1	GWB	PT-1	GWB	PT-1	GWB	PT-1	GWB	PT-1	ACT	FF	
2113	HSKPG	SV-4	SV-4	GWB	PT-1/WPP	GWB	PT-1/WPP	GWB	PT-1/WPP	GWB	PT-1/WPP	ACT-3	FF	4
2114	H.C. TOILET	SV-5	SV-5	GWB	CT-3/PT-3	GWB	CT-3/PT-3	GWB	CT-3/PT-3	GWB	CT-3/PT-3	GWB	PT-1	5
2115	EXAM	RBR-1	RB-1	GWB	PT-1	GWB	PT-1	GWB	PT-1	GWB	WPP/PT-1	ACT	FF	4
2116	EXAM	RBR-1	RB-1	GWB	PT-1	GWB	PT-1	GWB	PT-1	GWB	WPP/PT-1	ACT	FF	4
2117	SOILED UTILITY	SV-4	SV-4	GWB	PT-1	GWB	PT-1	GWB	PT-1	GWB	WPP/PT-1	ACT-3	FF	
2118	EQUIPMENT STORAGE	VCT	RB-1	GWB	PT-1	GWB	PT-1	GWB	PT-1	GWB	PT-1	ACT-2	FF	8
2119	H.C. TOILET	SV-5	SV-5	GWB	CT3/PT-3	GWB	CT-3/PT-3	GWB	CT-3/PT-3	GWB	CT-3/PT-3	GWB	PT-1	5
2121	ORTHO EXAM	RBR-1	RB-1	GWB	PT-1	GWB	PT-1	GWB	PT-1	GWB	WPP/PT-1	ACT	FF	4

GENERAL NOTES:

A. See Reflected Ceiling Plan for ceiling heights.

B. See Color and Materials Schedule for specific finish and color information.

C. All walls and soffits shall be PT-1, unless noted otherwise.

D. All ACT ceilings shall be ACT-1, unless noted otherwise.

E. All Resilient Base shall be RB-1, unless noted otherwise.

F. Not Used.

G. All Sheet Vinyl shall have heat welded seams, unless noted otherwise.

H. All Vinyl Wall Covering shall be VWC-1, unless noted otherwise.

I. All Carpet shall be CPT-1, unless noted otherwise.

J. Not Used

K. See Interior Elevations for casework colors and materials.

KEY NOTES:

1 Floor material and/or color varies. See Finish Plan.

2 Ceiling material and/or color varies. See Reflected Ceiling Plans.

3 Wall Paint color varies. See Interior Elevations.

4 WPPT-1 Wainscot - See Interior Elevations for more information. Provide WPP to 5'-6" high in Janitor's where scheduled.

5 CT Wainscot. See Interior Elevations for more information.
NOTE: Sustrate for all ceramic tile is tile backer board. GWB at painted areas only.

6 Not used.

7 Refer to Interior Elevations for extent of tile and/or location of tile types..
NOTE: Sustrate for all ceramic tile is tile backer board. GWB at painted areas only.

8 Provide VCT pattern 1. See Floor Finish Plans.

9 5'-0" Plywood Wainscot

10 P5/P1 indicates PT-5 below chair rail and PT-1 above.

11 P2/P1 indicates PT-2 below chair rail and PT-1 above.

12 See 5/A10.41 for typ. resiliant base conditions

13 See 3/A10.42 for typ. flooring transitions

14 Epoxy Paint

ABBREVIATIONS KEY NOTES:

ACT	Acoustical Ceiling Panel
AWC	Lineal Wood Ceilings
CONC	Concrete
CMU	Concrete Masonry Units
CPT	Carpet
CT	Ceramic Tile
(E)	Existing
FF	Factory Finish
GWB	Gypsum Wallboard
IGWB	Impact Resistant Gypsum Wallboard
PT	Paint
PL	Plastic Laminate
PLYWD	Plywood
RBR	Rubber Flooring
RB	Rubber Base
S	Sealer
SDT	Static Dissapative Tile
ST	Stone Tile
SV	Sheet Vinyl and Sheet Vinyl cove base
VCT	Vinyl Composite Tile
WC	Wall Covering
WD	Wood
WPP	Wall Protection Panels
WOM	Walk-off Mat

KMD KAPLAN McLAUGHLIN DIAZ

RIM ARCHITECTS

SOUTH PENINSULA HOSPITAL
EAST ADDITION & ALTERATIONS – PHASE 1
HOMER, ALASKA
FINISH SCHEDULE

Revisions
1 ADD. No.1, 04/21/06

Date 03/08/06
Drawn SK
Checked MV
Job No. 03117

Sheet No.
A2.31

FINISH SCHEDULE

ROOM NO.	ROOM OR SPACE NAME	FLOOR	BASE	NORTH WALL		EAST WALL		SOUTH WALL		WEST WALL		CEILING		NOTES
				MAT	FINISH	MAT	FINISH	MAT	FINISH	MAT	FINISH	MAT	FINISH	
							FINISH SCHEDULE LVL-2 CONTD							
2122	EXAM	RBR-1,2	RB-1	GWB	PT-1	GWB	PT-1	GWB	WPP/PT-1	GWB	PT-1	ACT	FF	1,4
2123	EXAM	RBR-1,2	RB-1	GWB	PT-1	GWB	PT-1	GWB	WPP/PT-1	GWB	PT-1	ACT	FF	1,4
2124	EXAM	RBR-1,2	RB-1	GWB	PT-1	GWB	PT-1	GWB	WPP/PT-1	GWB	PT-1	ACT	FF	1,4
1 2125	STORAGE	VCT	RB-1	GWB	PT-1	GWB	PT-1	GWB	PT-1	GWB	PT-1	ACT-2	FF	8
2126	BREAK ROOM	SV-4	SV-4	GWB	PT-1	GWB	PT-1	GWB	PT-1	GWB	PT-1	ACT-2	FF	
2127	MANAGER OFFICE	CPT-1	RB-1	GWB	PT-1	GWB	PT-1	GWB	PT-1	GWB	PT-1	ACT	FF	
2128	TOILET/SHOWER	CT-1	CT-4	GWB	CT-3	GWB	CT-3	GWB	CT-3	GWB	CT-3	GWB	PT-1	7
2129	TRAUMA	RBR-1,2	RB-1	GWB	PT-1	GWB	PT-1	GWB	PT-1,2	GWB	PT-1	ACT-3	FF	1
2130	GYN/SART	RBR-1	RB-1	GWB	PT-2	GWB	PT-1	GWB	PT-1	GWB	PT-2	ACT	FF	
2131	VEST	RBR-1	RB-1	GWB	PT-1	GWB	PT-1	GWB	PT-1	GWB	PT-1	ACT/GWB	FF/PT-6	
2132	WASH DOWN	CT-1	CT-4	GWB	CT-3	GWB	CT-3	GWB	CT-3	GWB	CT-3	GWB	PT-1	14
2134	EMT	RBR-1	RB-1	GWB	PT-1	GWB	PT-1	GWB	PT-1	GWB	PT-1	ACT-2	FF	
2205	CORRIDOR	SV-2	WD	GWB	PT-1	GWB	PT-1	-	-	GWB	PT-3	ACT/GWB	FF/PT-1	1,2
1 2206	STORAGE	VCT	RB-1	GWB	PT-1	GWB	PT-1	GWB	PT-1	GWB	PT-1	ACT-2	FF	8
2300	CORRIDOR	SV-2	RB-1	-	-	GWB	PT-1	GWB	PT-1	GWB	PT-5/PT-1	ACT/GWB	FF/PT-6	1,2,10
2301	CORRIDOR	SV-1,2	RB-1	GWB	PT-1	-	-	GWB	PT-1/PT-5	GWB	PT-1	ACT/GWB	FF/PT-1	1,2,10
1 2401	STORAGE	VCT	RB-1	GWB	PT-1	GWB	PT-1	GWB	PT-1	GWB	PT-1	ACT-2	FF	8
2600	CORRIDOR	SV-2	RB-1	(E)	PT-1	(E)	PT-1	(E)	PT-1	(E)/GWB	PT-1	(E)	(E)	
2602	CORRIDOR	WOM/SV-5	RB-1	GWB	PT-1	GWB	PT-1	(E)/GWB	PT-1	GWB	PT-1	ACT	FF	
2603	CORRIDOR	SV-1,2	RB-1	GWB	PT-1	GWB	PT-1	GWB	PT-1	GWB	PT-1	ACT	FF	
2603 A	EQUIPMENT ALCOVE	WOM	RB-1	-	-	GWB	PT-1	GWB	PT-1	GWB	PT-1	GWB	PT-1	
2604	CORRIDOR	SV 1,2	RB-1	-	-	GWB	PT-1	-	-	(E)/GWB	PT-1	ACT/GWB	FF/PT-6	2
2605	CORRIDOR	SV-1,2	SV	GWB	PT-1	GWB	PT-1	GWB	PT-1	-	-	ACT/GWB	FF/PT-6	2
2606	WAITNG	CPT-1	WD	GWB	WC-1	GWB	PT-1	-	-	GWB	PT-1	WC/GWB	FF/PT-4,6	1,2
2620	TECH WORK	SV-5	RB	-	-	(E)	PT-1	(E)	PT-1	(E)	PT-1	ACT-2	FF	
2627	TECH WORK	SV-5	RB-1	(E)/GWB	PT-1	(E)/GWB	PT-1	-	-	(E)	PT-1	ACT-2	FF	-
2631	CONTROL	VCT(E)	RB-1	(E)/GWB	PT-1	(E)/GWB	PT-1	(E)/GWB	PT-1	(E)/GWB	PT-1	ACT-2	FF	
2632	CAT SCAN (E)	VCT(E)	RB-1	(E)/GWB	PT-1	GWB	PT-1	(E)/GWB	PT-1	(E)/GWB	PT-1	ACT-2	FF	
2633	H.C. TOILET	SV-5	SV-5	GWB	CT-3/PT-3	GWB	CT-3/PT-3	GWB	CT-3/PT-3	GWB	CT-3/PT-3	GWB	PT-1	5
1 2634	TECH WORK	RB-1	RB-1	GWB	PT-1	(E)	PT-1	(E)/GWB	PT-1	-	-	ACT-2	FF	
2635	IMAGING MANAGERS OFFICE	CPT-1	RB-1	(E)/GWB	PT-1	GWB	PT-1	GWB	PT-1	(E)/GWB	PT-1	ACT	FF	
2636	STORAGE	SV-5	RB-1	GWB	PT-1	GWB	PT-1	GWB	PT-1	GWB	PT-1	ACT-2	FF	
2637	RECORD STORAGE	SV-5	RB-1	(E)/GWB	PT-1	(E)/GWB	PT-1	GWB	PT-1	GWB	PT-1	ACT-2	FF	
2638	MAMMO READING	SV-5	RB-1	GWB	PT-1	(E)	PT-1	GWB	PT-1	GWB	PT-1	ACT-2	FF	
2640	ULTRA SOUND 1	SV-4	RB-1	GWB	PT-1	GWB	PT-1	GWB	PT-1	(E)	PT-1	ACT	FF	
2641	CHANGING	SV-4	RB-1	GWB	PT-1	GWB	PT-1	GWB	PT-1	-	-	ACT	FF	
2642	H.C. TOILET	SV-4	SV-4	GWB	CT-3/PT-3	GWB	CT-3/PT-3	GWB	CT-3/PT-3	GWB	CT-3/PT-3	GWB	PT-1	
2643	IMAGING RECEPTION OFFICE	SV-2	RB-1	GWB	PT-1	GWB	PT-1	GWB	PT-1	GWB	PT-1	ACT/GWB	FF/PT-4	2
2650	FAMILY WAITING	CPT1,4	RB-1	GWB	PT-1	GWB	PT-2	GWB	PT-1	GWB	PT-1	ACT	FF	
2651	DEXA	SV-4	RB-1	GWB	PT-1	GWB	PT-1	GWB	PT-1	GWB	PT-2	ACT	FF	
2652	MAMMO	SV-4	RB-1	GWB	PT-1	GWB	PT-1	GWB	PT-1	GWB	PT-1	ACT	FF	
2653	CHANGING	SV-4	RB-1	GWB	PT-1	GWB	PT-1	GWB	PT-1	GWB	PT-1	ACT	FF	
2654	ULTRA- SOUND 2	SV-4	RB-1	GWB	PT-1	GWB	PT-1	GWB	PT-1	GWB	PT-1	ACT	FF	
2655	CHANGING	SV-4	RB-1	GWB	PT-1	GWB	PT-1	-	-	GWB	PT-1	ACT	FF	
2656	H.C. TLT	SV-4	SV-4	GWB	CT-3/PT-3	GWB	CT-3/PT-3	GWB	CT-3/PT-3	GWB	CT-3/PT-3	GWB	PT-1	
2657	ULTRA SOUND WORK	SV-5	RB-1	GWB	PT-1	GWB	PT-1	GWB	PT-1	GWB	PT-1	ACT	FF	
2658	TECH LOUNGE	VCT	RB-1	GWB	PT-1	GWB	PT-1	GWB	PT-1	GWB	PT-1	ACT-2	FF	8
2659	STORAGE	VCT	RB-1	GWB	PT-1	GWB	PT-1	GWB	PT-1	GWB	PT-1	ACT-2	FF/PT-1	8

KMD
KAPLAN McLAUGHLIN DIAZ

RIM
ARCHITECTS

SOUTH PENINSULA HOSPITAL
EAST ADDITION & ALTERATIONS – PHASE 1
HOMER, ALASKA
FINISH SCHEDULE

Revisions
1 ADD. No.1, 04/21/06

Date 03/08/06
Drawn SK
Checked MV
Job No. 03117

Sheet No.
A2.32

ELECTRICAL SYMBOL LEGEND

LIGHTING

- A/150 — LIGHTING FIXTURE TYPE, SEE LIGHTING FIXTURE FIXTURE SCHEDULE.
- $SS_2S_3S_4$ — SWITCHES UP 4'-0" AFF UON: SPST, DPST, THREE-WAY, FOUR-WAY.
- S_L — LOW VOLTAGE 3-POSITION SWITCH WITH LOCKING COVER, UP 4'-0" AFF UON.
- FLUORESCENT FIXTURE: RECESSED, OR SURFACE/PENDANT MOUNT. SEE LIGHTING FIXTURE SCHEDULE.
- RECESSED, OR SURFACE/PENDANT MOUNT LIGHTING FIXTURE WITH EMERGENCY POWER SUPPLY CONNECTION, SEE LIGHTING FIXTURE SCHEDULE.
- PENDANT MOUNT FLUORESCENT FIXTURE. SEE LIGHTING FIXTURE SCHEDULE.
- PENDANT MOUNT FLUORESCENT EMERGENCY FIXTURE. SEE LIGHTING FIXTURE SCHEDULE.
- RECESSED DOWNLIGHT FIXTURE. SEE LIGHTING FIXTURE SCHEDULE.
- RECESSED DOWNLIGHT EMERGENCY FIXTURE. SEE LIGHTING FIXTURE SCHEDULE.
- PENDANT MOUNT FLUORESCENT FIXTURE. SEE LIGHTING FIXTURE SCHEDULE.
- SURFACE MOUNT METAL HALIDE FIXTURE. SEE LIGHTING FIXTURE SCHEDULE. * NEXT TO FIXTURE INDICATES QUARTZ RESTRIKE SYSTEM.
- WALL MOUNT FLUORESCENT FIXTURE. SEE LIGHTING FIXTURE SCHEDULE.
- UNDER CABINET FLUORESCENT FIXTURE. SEE LIGHTING FIXTURE SCHEDULE.
- CEILING UNIT OR WALL MOUNTED EMERGENCY EXIT LIGHT WITH ARROW DIRECTIONS SHOWN. SEE LIGHTING FIXTURE FIXTURE SCHEDULE.
- WALL MOUNTED FIXTURE. SEE LIGHTING FIXTURE SCHEDULE.
- SITE LIGHT POLE WITH ROUND LUMINAIRES (UP TO 4 LUMINAIRES), SEE LIGHTING FIXTURE SCHEDULE.
- WALL MOUNTED METAL HALIDE FIXTURE. SEE LIGHTING FIXTURE SCHEDULE.
- SURFACE MOUNT OBSTRUCTION LIGHT.
- PC — PHOTOCELL
- OS — CEILING MOUNTED ULTRASONIC OCCUPANCY SENSOR. 2000 FT. SQ. COVERAGE, UON.
- OS — CEILING MOUNTED INFRARED OCCUPANCY SENSOR. 600 FT. SQ. COVERAGE, UON.
- OS — WALL MOUNTED INFRARED OCCUPANCY SENSOR. NARROW BEAM COVERAGE, UON.
- $_{S_a}$OS$_{S_b}$ — LOWER CASE SUBSCRIPT NEAR SWITCH OR OCCUPANCY SENSOR INDICATES LAMP(S) OR FIXTURES TO BE CONTROLLED.
- BOLLARD

FIRE ALARM

- F — MANUAL PULL STATION, UP 48", UON.
- F — CHIME/STROBE, UP 80", UON.
- HORN/STROBE, UP 80", UON.
- CM — CONTROL MODULE
- $_{DH}$ — DOOR HOLDER, COORDINATE HEIGHT WITH DOOR INSTALLATION.
- $_P$ — PHOTOELECTRIC SMOKE DETECTOR, CEILING MOUNTED, UON.
- $_F$ — HEAT DETECTOR WITH FIXED TEMPERATURE AT 135°F, CEILING MOUNTED, UON.
- DUCT SMOKE DETECTOR
- FACP — FIRE ALARM CONTROL PANEL, UP 54" TO CENTER, UON.
- FAA — FIRE ALARM ANNUNCIATOR, UP 54" TO CENTER, UON.
- $_{SFD}$ — SMOKE FIRE DAMPER
- F — EXISTING FIRE ALARM CHIME
- F — EXISTING FIRE ALARM BELL
- SPRINKLER BELL

POWER

- CI-12 — EQUIPMENT IDENTIFICATION, SEE MECHANICAL EQUIPMENT SCHEDULES.
- T — TRANSFORMER, FLOOR MOUNTED DRY TYPE, UON.
- J — JUNCTION BOX OR POWER CONNECTION.
- WP — DUPLEX RECEPTACLE UP 18" UON. G=GROUND FAULT CIRCUIT INTERRUPTER PROTECTION, WP=WEATHERPROOF WITH GFCI.
- WP — QUADRUPLEX RECEPTACLE UP 18" UON, G=GROUND FAULT CIRCUIT INTERRUPTER PROTECTION, WP=WEATHERPROOF WITH GFCI.
- SPECIAL RECEPTACLE(S) OF AMP, VOLTAGE RATING AND PHASE AS NOTED UP 18" UON.
- SINGLE RECEPTACLE UP 18" UON. G=GROUND FAULT CIRCUIT INTERRUPTER PROTECTION, WP=WEATHERPROOF WITH GFCI.
- EXISTING PANELBOARD TO REMAIN: FLUSH OR SURFACE MOUNTED.
- PANELBOARD: FLUSH OR SURFACE MOUNTED.
- 5 — SINGLE PHASE MOTOR CONNECTION. ".5" DENOTES MOTOR HP, "FHP" = FRACTIONAL HP (<1/3 HP)
- 7.5 — THREE PHASE MOTOR CONNECTION. "7.5" DENOTES MOTOR HP.
- S_M — MANUAL MOTOR SWITCH WITH THERMAL OVERLOAD(S).
- COMBINATION MOTOR CONTROLLER WITH DISCONNECT.
- HEAVY DUTY UNFUSED DISCONNECT
- VFD — MOTOR CONTROLLER, HP RATED, FULL VOLTAGE NON-REVERSIBLE UON. VFD= VARIABLE FREQUENCY DRIVE – SEE MECHANICAL.
- FUSED DISCONNECT
- R11 — ELECTRICAL EQUIPMENT IDENTIFICATION. SEE ELECTRICAL EQUIPMENT CONNECTION SCHEDULE ON SHEET E1.3.

TELECOMMUNICATION

- DATA/TELEPHONE OUTLET, 2-GANG BOX AND 2-GANG RING ONLY, UP 4" ABOVE BACKSPLASH AT COUNTERS OR 18" AFF OTHERWISE, UON.
- S_V — VOLUME CONTROLLER
- WALL TELEPHONE OUTLET, 2-GANG BOX AND 1-GANG RING ONLY, UP 54" AFF, UON.
- S — SPEAKER, FLUSH CEILING
- OUTSIDE SPEAKER, WALL MOUNTED UP 96", UON.
- WP — VIDEO CAMERA, WP=WEATHERPROOF.
- TV — RECREATIONAL TV OUTLET, PROVIDE 2-GANG BOX 1-GANG RING ONLY, UP 18", UON.
- DATA CABLE TRAY
- PATIENT TELEMETRY ANTENNA, CEILING MOUNTED, UON.
- PC — PROVIDE ELECTRICAL TO SERVICE POWER COLUMN, HILLROM950, INCLUDES AUDIO STATION WITH CODE BLUE AND BED INTERFACE UNIT, POWER OUTLETS AND DATA OUTLET, FLOOR MOUNTED.

CABLE TRAY TYPE TAG:
- NUMBER OF STACKED TRAYS IF MORE THAN 1
- CABLE TRAY TYPE: TR=TROUGH, CR=CENTER RAIL, WB=WIRE BASKET, LA=LADDER, WHERE TWO ARE SHOWN EITHER MAY BE USED.
- MOUNTING ELEVATION TO BOTTOM OF TRAY, APPROXIMATE
- XXX X XX — NOMINAL WIDTH, NOMINAL DEPTH

NURSE CALL

- R6 — SYSTEM ROOM BOARD, ABOVE CEILING, COORDINATE INSTALLATION OF BACKING PLATE, UON.
- B — BED INTERFACE UNIT, PROVIDE 2-GANG DEEP BOX WITH 2-GANG MUDRING, UP 54", UON.
- N — ZONE DOME LIGHT, CEILING MOUNTED, 2-GANG DEEP BOX WITH 2-GANG RING, UON. PROVIDE T-BAR CEILING SUPPORT WHERE REQUIRED,
- +N — PULL CORD/SWITCH, PROVIDE 2-GANG DEEP BOX WITH 1-GANG RING, UP 30", UON.
- +N — PULL CORD, SHOWER, PROVIDE 2-GANG DEEP BOX WITH 1-GANG RING, UP 54", UON.
- 4 — +N — DOME LIGHT, CEILING MOUNTED IN MANUFACTURERS BOX. PROVIDE T-BAR CEILING SUPPORT WHERE REQUIRED.
- +N — PUSH BUTTON CODE BLUE, PROVIDE 2-GANG DEEP BOX WITH 1-GANG RING UP 54", UON.
- +N — AUDIO STATION WITH CODE BLUE, PROVIDE 4-GANG 3-1/2" DEEP BOX, UP 60", UON.
- +N — AUDIO STATION, PROVIDE 4-GANG 3-1/2" DEEP BOX, UP 60", UON.
- +N — PUSH BUTTON STAFF EMERGENCY, PROVIDE 2-GANG DEEP BOX WITH 1-GANG RING UP 54", UON.
- +N — NURSE CALL MASTER STATION
- S_K — KEY OPERATED SWITCH, 2 POSITION, PROVIDE 2-GANG DEEP BOX WITH 1-GANG RING, UP 54", UON.
- RLR — ROOM LOCATOR RECEIVER, CEILING MOUNTED, 2-GANG DEEP BOX WITH 2-GANG RING, UON. PROVIDE T-BAR CEILING SUPPORT WHERE REQUIRED,
- PDC — POWER DISTRIBUTION CABINET, UP 60" TO TOP, UON.

CIRCUIT IDENTIFICATION

A | 24 — GROUP OR EQUIPMENT CIRCUIT IDENTIFICATION. "A" DENOTES PANEL NAME, "24" DENOTES CIRCUIT NUMBER:

1) DEDICATED EQUIPMENT CIRCUIT WHERE COMBINED WITH EQUIPMENT IDENTIFICATION.

2) WHERE SHOWN ALONE IN A ROOM, ALL DEVICES ARE CONNECTED TO INDICATED PANEL AND CIRCUIT, UON.

3) WHERE MULTIPLE CIRCUIT IDENTIFICATIONS SHOWN IN A ROOM, SEE EXAMPLE:

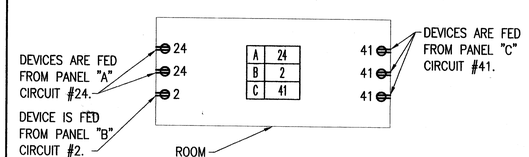

4) ALL SINGLE PHASE BRANCH CIRCUITS SHALL BE 2#12, 1#12 GND, 1/2" C., AND ALL THREE PHASE BRANCH CIRCUITS SHALL BE 3#12, 1#12 GND, 1/2" C., U.O.N.

SHEET NOTES

1. ELECTRICAL SHEET NOTES, SEE DESCRIPTION ON SAME SHEET.

LINE TYPES

- TO BE DEMOLISHED LINE TYPE
- EXISTING TO REMAIN LINE TYPE
- NEW WORK LINE TYPE

ABBREVIATIONS

+C	DEVICE HEIGHT 4" ABOVE BACKSPLASH
+36"	DEVICE HEIGHT 36" AFF
AFF	ABOVE FINISH FLOOR
AFG	ABOVE FINISH GRADE
APROX	APPROXIMATELY
ATS	AUTOMATIC TRANSFER SWITCH
AUTO	AUTOMATIC
AUX	AUXILIARY
AWG	AMERICAN WIRE GAGE
BEND	BENDING
C	CONDUIT
CAT	CATEGORY
CL	CENTER LINE
CR	CENTER RAIL
(D)	DEMOLISH
DACT	DIGITAL ALARM COMMUNICATIONS TRANSMITTER
DDC	DIRECT DIGITAL CONTROL
DIA	DIAMETER
(E)	EXISTING
E	EMERGENCY
EA	EACH
EDP	EMERGENCY DISTRIBUTION PANEL
EPS	EMERGENCY POWER SUPPLY
F	FAHRENHEIT
FAA	FIRE ALARM ANNUNCIATOR
FACP	FIRE ALARM CONTROL PANEL
FHP	FRACTIONAL HORSE POWER (<1/3 HP)
FT	FOOT, FEET
G,GFCI	GROUND FAULT CIRCUIT INTERRUPTER
GND	GROUND
GYP	GYPSUM BOARD
HDWE	HARDWARE
HEA	HOMER ELECTRIC ASSOCIATION
HID	HIGH INTENSITY DISCHARGE
HPF	HIGH POWER FACTOR
HPS	HIGH PRESSURE SODIUM
HWC	HOT WATER CIRCULATION
KCMIL	1000 CIRCULAR MILS
LAB	LABORATORY
LC	LIGHTING CONTACTOR
LV	LOW VOLTAGE
LED	LIGHT-EMITTING DIODE
MAX	MAXIMUM
MCC	MOTOR CONTROL CENTER
MDP	MAIN DISTRIBUTION PANEL
MH	METAL HALIDE
MIN	MINIMUM
MOR	MULTI-OUTLET RACEWAY
MTGB	MAIN TELECOMMUNICATIONS GROUNDING BAR
MTTB	MAIN TELEPHONE TERMINAL BOARD
NDP	NORMAL DISTRIBUTION PANEL
NEC	NATIONAL ELECTRICAL CODE
NIC	NOT IN CONTRACT
NL	UNSWITCHED NIGHT LIGHT FIXTURE
OO	OWNER FURNISHED – OWNER INSTALLED.
PC	PHOTOCELL, PERSONAL COMPUTER
PNL	PANELBOARD
PROX	PROXIMITY
SDBC	SOFT DRAWN BARE COPPER
SDP	STANDBY DISTRIBUTION PANEL
SFD	SMOKE FIRE DAMPER
SPNL	SPECIAL PANEL
SVC	SERVICE
SWBD	SWITCHBOARD
TEL	TELECOMMUNICATIONS
TGB	TELEPHONE GROUND BUS
TMGB	TELEPHONE MAIN GROUNDING BUS
TR	TROUGH
TTB	TELEPHONE TERMINAL BOARD
TVSS	TRANSIENT VOLTAGE SURGE SUPPRESSION
TYP	TYPICAL
UG	UNDERGROUND
UON	UNLESS OTHERWISE NOTED
VFD	VARIABLE FREQUENCY DRIVE
W	WATT
WB	WIRE BASKET
WP	WEATHERPROOF
XFMR	TRANSFORMER
XP	EXPLOSION PROOF

ELECTRICAL AS-BUILTS
FALL 2007

PDC INC. ENGINEERS
1231 Gambell St., Anchorage, Alaska 99501
RIM ARCHITECTS

SOUTH PENINSULA HOSPITAL
EAST ADDITION & ALTERATIONS – PHASE 1
HOMER, ALASKA
LEGEND AND ABBREVIATIONS

Revisions
4 ADD. No.4, 05/01/06

Date	03/08/06
Drawn	
Checked	PF
Job No.	03

E1.

LIGHTING FIXTURE SCHEDULE

KEY	LAMPS NO	LAMPS TYPE	DESCRIPTION	MOUNTING	MANUFACTURER'S NUMBER, (SEE NOTES 1–10, 15)
A/70	2	F32WT8/SPX35	2'X4' PREMIUM SPECIFICATION GASKETED FLUORESCENT TROFFER WITH STEEL HOUSING AND DOOR, AND 0.125" THICK ACRYLIC LENS.	CEILING, RECESSED	LITHONIA #2SP-2-32-A12125-120-GEB10IS
A/100	3	F32WT8/SPX35	2'X4' PREMIUM SPECIFICATION GASKETED FLUORESCENT TROFFER WITH STEEL HOUSING AND DOOR, AND 0.125" THICK ACRYLIC LENS.	CEILING, RECESSED	LITHONIA #2SP-3-32-A12125-120-GEB10IS
A/130	4	F32WT8/SPX35	2'X4' PREMIUM SPECIFICATION GASKETED FLUORESCENT TROFFER WITH STEEL HOUSING AND DOOR, AND 0.125" THICK ACRYLIC LENS.	CEILING, RECESSED	LITHONIA #2SP-4-32-A12125-120-GEB10IS
B/100	3	F32WT8/SPX35	2'X4' HIGH PERFORMANCE PARABOLIC FLUORESCENT W/ 3" DEEP LOUVERS, <10% THD INSTANT START ELECTRONIC BALLAST.	CEILING, RECESSED	LITHONIA #2PM3N-G-B-3-32-18LD-120-GEB10IS
B/130			NOT USED		
C/70	2	F32WT8/SPX35	2'X4' DIRECT/INDIRECT FLUORESCENT W/ PERFORATED METAL SHIELD, <10% THD INSTANT START ELECTRONIC BALLAST.	CEILING, RECESSED	LITHONIA #2AV-G-2-32-MDR-120-GEB10IS
C/100	3	F32WT8/SPX35	2'X4' DIRECT/INDIRECT FLUORESCENT W/ PERFORATED METAL SHIELD, <10% THD INSTANT START ELECTRONIC BALLAST.	CEILING, RECESSED	LITHONIA #2AV-G-3-32-MDR-120-GEB10IS
D/40	–	–	NOT USED	–	–
EX1	–	LED	DIE-CAST ALUMINUM EXIT SIGN W/ NICKEL-CADMIUM BATTERY, W/ SINGLE STENCIL FACE, GREEN DIFFUSE LED LETTERS. UNIVERSAL MOUNTING AND DIE-CAST ALUMINUM CANOPY WHERE REQUIRED.	CEILING, SURFACE OR WALL	LITHONIA #LE-S-W-1-G-120/277-ELN 2
EX2	–	LED	DIE-CAST ALUMINUM EXIT SIGN W/NICKEL-CADMIUM BATTERY, W/DOUBLE STENCIL FACES, GREEN DIFFUSE LED LETTERS. UNIVERSAL MOUNTING AND DIE-CAST ALUMINUM CANOPY WHERE REQUIRED.	CEILING, SURFACE OR WALL	LITHONIA #LE-S-W-2-G-120/277-ELN
F/70	2	F32WT8/SPX35	4' FLUORESCENT WRAPAROUND W/ <10% THD INSTANT START ELECTRONIC BALLAST, ACRYLIC PRISMATIC DIFFUSER.	CEILING, SURFACE SEE NOTE 17	LITHONIA #LB-2-32-120-GEB10IS
F/130	4	F32WT8/SPX35	4' FLUORESCENT WRAPAROUND W/ <10% THD INSTANT START ELECTRONIC BALLAST, ACRYLIC PRISMATIC DIFFUSER.	CEILING, SURFACE	LITHONIA #LB-4-32-120-GEB10IS
G/20	–	–	NOT USED	–	–
G/30	1	F26TRT/SPX35	6" COMPACT FLUORESCENT DOWNLIGHT W/LOW BRIGHTNESS REFLECTOR, <10% THD INSTANT START ELECTRONIC BALLAST.	CEILING, RECESSED	LITHONIA #AFV-26TRT-6AR-120-GEB10IS 2
G/40	1	F32TRT/835 /A/4P/EOL	6" COMPACT FLUORESCENT DOWNLIGHT W/LOW BRIGHTNESS REFLECTOR, <10% THD INSTANT START ELECTRONIC BALLAST, SEE NOTE 12.	CEILING, RECESSED	LITHONIA #AFV-32TRT-6AR-120-GEB10IS
H/70	2	F32WT8/SPX35	4' HEAVY-DUTY FLUORESCENT INDUSTRIAL TURRET WITH 10% UPLIGHT, STEEL HOUSING, AND WIRE GUARD.	CEILING, SURFACE	LITHONIA #AF10-2-32-120-GEB10IS
I/70	–	–	NOT USED	–	–
J/40			NOT USED		
K/40	1	F32WT8/SPX35	4' FLUORESCENT UNDERCABINET FIXTURE W/ 75% TRANSMISSION TRANSLUCENT OPAL DIFFUSER AND HIGH POWER FACTOR RAPID START ELECTRONIC BALLAST.	UNDERCABINET, SURFACE	ALKCO #332/ECB/RSW 2
L/240			NOT USED		
M/70	2	F25T8/SPX35	INTERIOR WALL SCONCE, ALUMINUM FRAME, NATURAL ALUMINUM FINISH, 37" LENGTH, 4" DEPTH.	WALL, NOTE 15	COOPER LIGHTING #605-37-T8/2/25-120-NA
N/60			NOT USED		
O/40	1	F32TBX/835 /A/4P/EOL	9" COMPACT FLUORESCENT DOWNLIGHT W/ DROP OPAL LENS AND ESI ELECTRONIC BALLAST.	CEILING, RECESSED	LITHONIA #LGFV-32TRT-9-DOL-120-ESICF
P/100	1	MXR100 /C/U/MED	METAL HALIDE DOWNLIGHT W/ ONE-PIECE, HYDROFORMED, ANODIZED, ALUMINUM REFLECTORS AND RUGGED, HEAVY-GAUGE, LIGHTWEIGHT, ALUMINUM HOUSING. SEE NOTE 18.	CEILING, SURFACE	LITHONIA #KPS-100M-R5-120-CR-SCWA
Q/30	1	F26TBX/SPX35 /A/4	4" DIAMETER DIRECT FLUORESCENT IN ALUMINUM HOUSING AND CLEAR DECORATIVE TRIM.	CEILING, PENDANT SEE NOTE 15.	COOPER LIGHTING #422-CFL/1/26-120V-MW
R/50	1	Q50MR16C /CG55	SEMI-RECESSED, LOW VOLTAGE DOWNLIGHT W/ HAND-POURED GLASS DIFFUSER, FULLY RECESSED HOUSING AND JUNCTION BOX.	CEILING, RECESSED.	LEUCOS LIGHTING FROSTED #ONY-120/12V-50W RFI 132
S/100	1	LU100 /SBY/XL	EXTRUDED ALUMINUM 8" WIDTH BOLLARD 43" HEIGHT WITH CYLINDRICAL ALZAK REFLECTOR.	BOLLARD	LITHONIA #KB-8-100-CYA-208
SF/40	1	F32WT8/SPX35	48" FLUORESCENT STRIP W/ <10% THD INSTANT START ELECTRONIC BALAST.	SURFACE, COVE UPLIGHT	LITHONIA #C-132-120-GEB10IS
T/200	6	F32WT8/SPX35	2'X4' FLUORESCENT SURGICAL TROFFER W/ ASYMMETRIC/SYMMETRIC LENS, RADIO SUPRESSORS, AND SINGLE LAMP INTERIM BATTERY BACK-UP. MATCH CIRCUIT VOLTAGE. SEE NOTE 1.	CEILING, RECESSED	ALKCO #ST8240-1-X-GEN-1
U/150	1	LU150/SS /SBY/XL	HIGH PRESSURE SODIUM SEMI-SPHERICAL AREA LUMINAIRE WITH SPUN ALUMINUM HOUSING, GLASS LENS, CUT-OFF OPTICS, AND IES TYPE III DISTRIBUTION. SEE NOTE 11.	POLE, +30'-0" AFG	GARDCO #MA-17-1-3-150HPS-208-NA W/ #SRS-30H-5-D1-NP. SEE NOTE 16.
U/300	3	LU150/SS /SBY/XL	TWO HIGH PRESSURE SODIUM SEMI-SPHERICAL AREA LUMINAIRES WITH SPUN ALUMINUM HOUSING, GLASS LENS, CUT-OFF OPTICS, AND IES TYPE III DISTRIBUTION. SEE NOTES 11 & 14.	POLE, +30'-0" AFG	GARDCO #MA-17-2-3-150HPS-208-NA W/ #SRS-30H-5-D2-NP. SEE NOTE 16.
U/600	4	LU150/SS /SBY/XL	FOUR HIGH PRESSURE SODIUM SEMI-SPHERICAL AREA LUMINAIRES WITH SPUN ALUMINUM HOUSING, GLASS LENS, CUT-OFF OPTICS, AND IES TYPE III DISTRIBUTION. SEE NOTES 11 & 14.	POLE, +30'-0" AFG	GARDCO #MA-17-4-3-150HPS-208-NA W/ #SRS-30H-5-D4-NP. SEE NOTE 16.
V/150	4	LU150/SS /SBY/XL	METAL HELIDE SEMI-SPHERICAL AREA LUMINAIRE WITH SPUN ALUMINUM HOUSING, GLASS LENS, CUT-OFF OPTICS, AND IES TYPE III DISTRIBUTION. SEE NOTE 18.	WALL, SEE NOTE 14	GARDCO #MW-17-1-3-150MH-208-NA-HS
W/80	2	F27W/T5/841	WET LOCATION 316 STAINLESS STEEL CONSTRUCTION AND HDWE, 3"X4" MAX CROSS SECTION WITH ROUND CLEAR PRISMATIC LENS, LOW TEMP BALLAST.	CANOPY STRUCTURE	PARAMOUNT #C2-1-25-8-S4-D8-M2-120 ~~#C2-1-25T8-8-S4-D8-M2-P9-120~~ RFI 114
X/40			NOT USED		
Y/120	2	54T5HO	48" FLUORESCENT W/ DIE-FORMED REFLECTORS, PARABOLIC SEMI-SPECULAR ALUMINUM BAFFLES.	PENDANT, SEE NOTE 15	PEERLESS:#EGSCM4-2-54T5HO-R4-120--DCT-F2-18-C200-ACG
Z/100	3	F32T8	48" DIRECT LOUVER W/ COLD-ROLLED 20-GAUGE STEEL CHANNEL AND LOUVERS, AND NARROW LIGHT DISTRIBUTION.	PENDANT, TO 10'-0"	LITHONIA #MS8ST-2-32-SBL-ND-120-GEB10RS

LIGHTING FIXTURE SCHEDULE

KEY	LAMPS NO	LAMPS TYPE	DESCRIPTION	MOUNTING	MANUFACTURER'S NUMBER, (SEE NOTES 1–10, 15)
GV/40			NOT USED		
NV/70			NOT USED		
LV/150			NOT USED		
AA/116	1	–	OBSTRUCTION LIGHT. FAA AC 150/5345, L810 COMPLIANT.	ON BOILER STACK	CROUSE HINDS FF 40940-116-~~OR~~ G-R RFI 55

2

LIGHTING FIXTURE NOTES

1. VERIFY CEILING TYPES THROUGHOUT. PROVIDE ALL ACCESSORIES, TRIM, FLANGES, OUTLET BOXES, ETC. FOR COMPLETE AND FINISHED INSTALLATION.
2. PROVIDE FLUORESCENT ENERGY CONSERVING ELECTRONIC BALLASTS IN COMBINATION WITH ENERGY CONSERVING LAMPS THROUGHOUT, UON.
3. PROVIDE ALL FIXTURES WITH LABEL SUITABLE FOR APPLICATION PER NATIONAL ELECTRICAL CODE.
4. MANUFACTURERS LISTED ARE TO ESTABLISH A LEVEL OF QUALITY AND TYPE OF EQUIPMENT. SIMILAR EQUIPMENT MAY BE SUBMITTED FOR APPROVAL IF EQUAL.
5. ALL LIGHTING FIXTURES SHALL BE SUITABLE FOR CONNECTION TO 120 VOLT CIRCUITS, UON.
6. WHERE ONLY ONE FIXTURE TYPE DESIGNATION IS SHOWN ON THE PLANS IN A ROOM WITH MORE THAN ONE FIXTURE SYMBOL OF THE SAME SIZE AND SHAPE, THE INTENT IS TO INDICATE THAT ALL FIXTURES ARE THE SAME TYPE, UON.
7. ALL FLUORESCENT LAMPS SHALL BE LOW MERCURY TYPE, RE835 PHOSPHOR (3500°K, 82+CRI).
8. ALL MOUNTING HEIGHTS SPECIFIED ARE TO CENTER LINE OF DEVICE, UON. COORDINATE WITH ARCHITECTURAL AND OTHER FEATURES.
9. EMERGENCY DESIGNATED LIGHT FIXTURES SHALL HAVE ALL LAMPS CONNECTED TO THE EMERGENCY POWER SUPPLY, UON.
10. NIGHT LIGHT FIXTURES SHALL BE UNSWITCHED AND REMAIN IN OPERATION AT ALL TIMES.
11. BALLASTS FOR EXTERIOR HID FIXTURES SHALL BE HPF TYPE RATED FOR –40° F OPERATION.
12. PROVIDE 0–10V FLUORESCENT DIMMING BALLASTS FOR FIXTURES NOTED.
13. PROVIDE SWIVEL ADAPTORS AT FIXTURE AND CEILING SUPPORT BOXES.
14. COORDINATE ALL MOUNTING HEIGHTS WITH ARCHITECTURAL
15. SEE ARCHITECTURAL ELEVATIONS FOR MOUNTING HEIGHT.
16. PROVIDE MODIFICATIONS AS REQUIRED TO POLE TO MEET 125MPH WIND WITH 1.3 GUST FACTOR.
17. PROVIDE CHAIN SUPPORT MOUNTING TO 10' AFF WHERE NOTED.
18. PROVIDE QUARTZ RESTRIKE SYSTEM WHERE NOTED.
19. AMBIENT AND READING LIGHTS ARE CONTROLLED BY THE SAME LV SWITCH.

R1M ARCHITECTS
PDC INC. ENGINEERS
1231 Gambell St., Anchorage, Alaska 99501

SOUTH PENINSULA HOSPITAL
EAST ADDITION & ALTERATIONS – PHASE 1
HOMER, ALASKA
FIXTURE SCHEDULE

Revisions
2 ADD. No.2, 04/28/06

Date	03/08/06
Drawn	ML/DT
Checked	PF/RP
Job No.	03117

E1.2

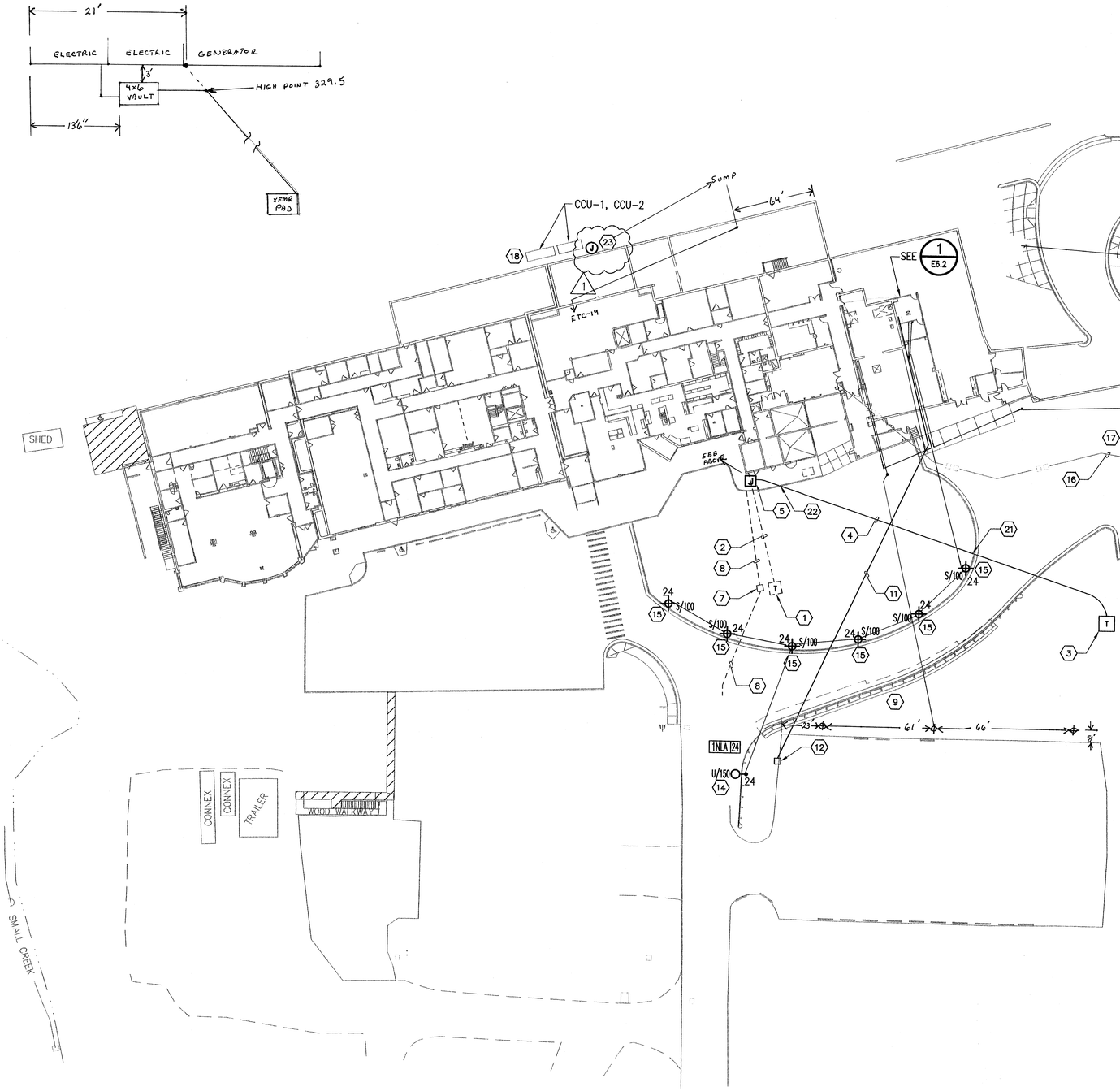

1 SITE PLAN
SCALE: 1" = 30'-0"

SHEET NOTES

1. EXISTING TRANSFORMER TO BE REMOVED BY UTILITY.
2. DEMOLISH EXISTING BUILDING SERVICE FEEDER.
3. NEW SERVICE TRANSFORMER, METER AND CT'S PROVIDED BY UTILITY. COORDINATE WITH HEA.
4. PROVIDE NEW CONCRETE ENCASED DUCT BANK FOR BUILDING SERVICE LATERAL FEEDERS. SEE DETAIL 2, SHEET E8.1.
5. PROVIDE NEW HANDHOLE FOR CONNECTION INTO EXISTING SERVICE DUCTS, SEE DETAIL 4, SHEET E8.1. COORDINATE HAND HOLE LOCATION AND ROUTING OF CONDUITS FROM NEW TRANSFORMER TO AVOID OTHER UTILITIES. SEE CIVIL FOR ADDITIONAL INFORMATION.
6. ILLUMINATED SIGN.
7. EXISTING TELEPHONE UTILITY PEDESTAL TO BE DEMOLISHED. COORDINATE ALL WORK WITH ALASKA COMMUNICATIONS SYSTEMS (ACS).
8. PROTECT EXISTING UNDERGROUND TELEPHONE UTILITY SERVICE CABLE DURING CONSTRUCTION. CABLE SHALL REMAIN OPERATIONAL WITH NO INTERRRUPTION OF SERVICE. COORDINATE ALL WORK WITH ACS.
9. DEMOLISH EXISTING HELIPAD LIGHTING FIXTURES, CONDUITS, WIRING, AND ASSOCIATED CIRCUIT(S) BACK TO SOURCE PANELBOARD.
10. PROVIDE CONNECTION TO PUMP SKID CONTROL PANEL IN PACKAGED PUMPHOUSE.
11. PROVIDE (2) 4"C WITH PULL WIRE FOR TELEPHONE UTILITY SERVICE CABLE AND INNERDUCT. PROVIDE RIGID METAL CONDUIT UNDER BUILDING FOUNDATION. COORDINATE INSTALLATION AND REQUIREMENTS WITH ACS.
12. NEW TELEPHONE SERVICE PEDESTAL(BY ACS).
13. CONNECT ALL LIGHTING FIXTURES ON THIS PLAN THROUGH LIGHTING CONTACTOR "LC-2".
14. PROVIDE CONCRETE LIGHT POLE BASE, SEE DETAIL 1, SHEET E8.1.
15. PROVIDE BASE FOR BOLLARD LUMINAIRE, SEE DETAIL 5, SHEET E8.1.
16. DEMOLISH UNDERGROUND TELEPHONE TO ACCESSIBLE LOCATION OUTSIDE PROJECT AREA. COORDINATE WITH TELEPHONE UTILITY FOR LOCATION AND TERMINATION REQUIREMENTS.
17. DEMOLISH ELECTRICAL EQUIPMENT CONDUIT AND WIRING. COORDINATE WITH UTILITIES FOR LOCATIONS OF UNDERGROUND WIRING.
18. DEMOLISH CONDUITS AND WIRING BETWEEN DISCONNECTS AND CCU-1 AND CCU-2. REMOVE EXISTING DISCONNECTS, SAVE FOR RE-USE. DEMOLISH CONDUITS AND WIRING BACK TO ACCESSIBLE LOCATION IN CRAWLSPACE, TERMINATE WIRING IN JUNCTION BOX FOR EXTENSION TO RELOCATED CCU-1 AND CCU-2, SEE E6.1 FOR NEW CCU-1, CCU-2 LOCATION.
19. PROVIDE WEATHERPROOF GFCI RECEPTACLE. MOUNT AT 48" AFG ON LIGHT POLE.
20. PROVIDE WEATHERPROOF GFCI RECEPTACLE ON BACK SIDE OF SIGN. MOUNT 24" AFG, MINIMUM.
21. 328.5' MAXIMUM ELEVATION TO TOP OF DUCT BANK CONCRETE.
22. 330.0' MAXIMUM ELEVATION TO TOP OF DUCT BANK CONCRETE.
23. PROVIDE ONE EACH 20 AMP 120 VAC CIRCUITS FROM CLOSEST AVAILABLE PANELBOARD FOR SUMP PUMPS IN SUMP PITS SD11 AND SD13. SEE CIVIL FOR LOCATIONS. (1)

PDC INC. ENGINEERS
1231 Gambell St., Anchorage, Alaska 99501
R1M ARCHITECTS

SOUTH PENINSULA HOSPITAL
EAST ADDITION & ALTERATIONS – PHASE 1
HOMER, ALASKA
SITE PLAN

Revisions
1 ADD. No.1, 04/21/06

Date	03/08/06
Drawn	KB/DT
Checked	PF/RP
Job No.	03117

E1.4

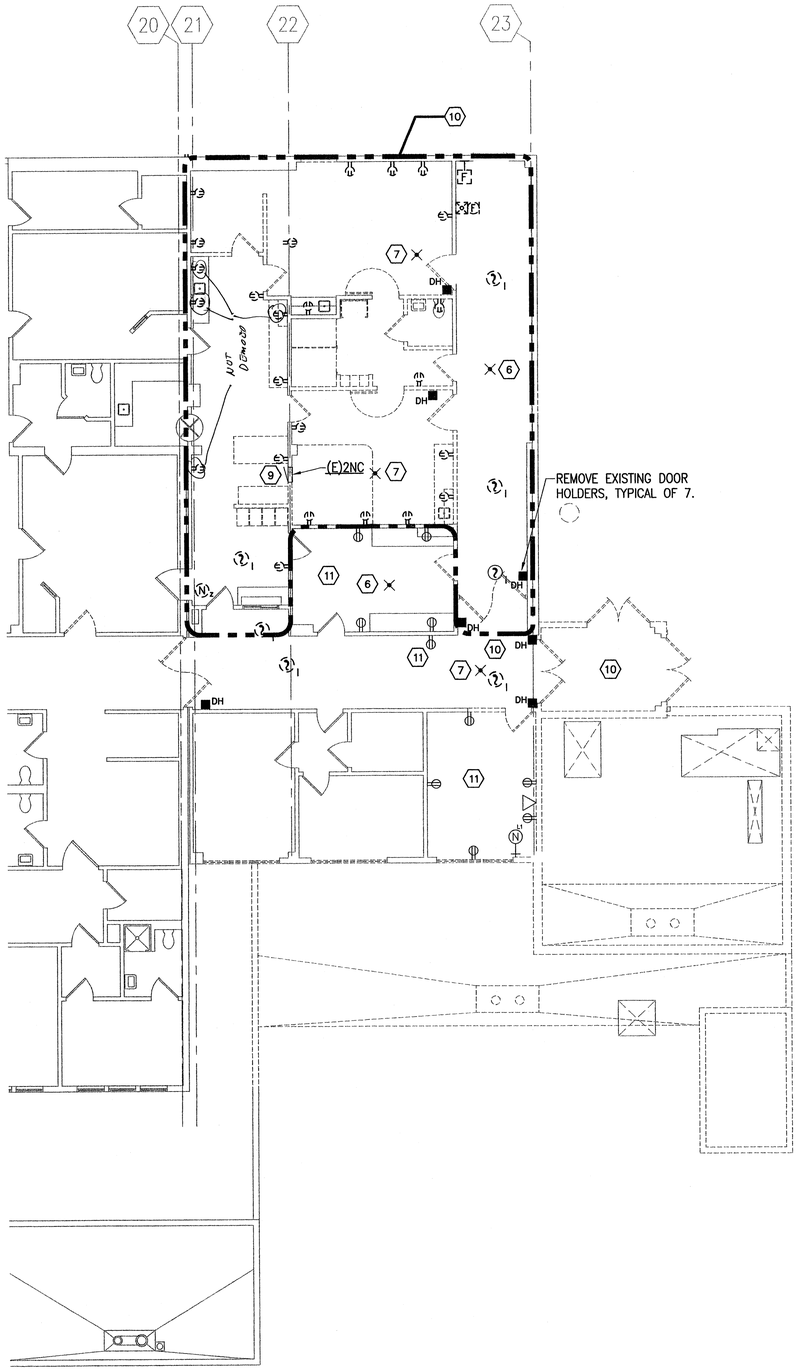

1 POWER & SIGNAL DEMO – SECOND FLOOR
SCALE: 1/8" = 1'-0"

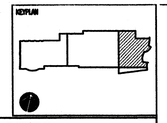

SHEET NOTES

1. REMOVE ALL WIRING, RACEWAYS AND BOXES ASSCOCIATED WITH DEMOLISHED EQUIPMENT.
2. INFORMATION FOR THIS DRAWING OBTAINED FROM AS-BUILT DRAWINGS AND SITE OBSERVATIONS. VERIFY FIELD CONDITIONS PRIOR TO DEMOLITION.
3. REMOVED NURSE CALL PATIENT TELEMETRY ANTENNA, PANELBOARDS, TELECOMMUNICATION OUTLETS. TURN OVER TO OWNER.

4. NOT USED
5. NOT USED
6. PROTECT AND SAFELY REMOVE EXISTING PATIENT TELEMETRY ANTENNA AND CABLING FOR REUSE/RELOCATION BY OWNER.
7. EXISTING PATIENT TELEMETRY ANTENNA AND CABLING TO REMAIN.
8. NOT USED
9. RELOCATE EXISTING PANEL "2NC". SEE E4.2 FOR NEW LOCATION.
10. DEMOLISH EQUIPMENT IN THIS ROOM OR AREA, UON.
11. EXISTING TO REMAIN, UON.
12. RELOCATE EXISTING GENERATOR AND MASTER MEDICAL GAS ALARM PANEL TO MANAGERS OFFICE 2541. SEE E5.4A FOR NEW LOCATION.

PDC INC. ENGINEERS
1231 Gambell St., Anchorage, Alaska 99501
R1M ARCHITECTS

SOUTH PENINSULA HOSPITAL
EAST ADDITION & ALTERATIONS – PHASE 1
HOMER, ALASKA
POWER & SIGNAL DEMO – SECOND FLOOR

Revisions

Date	03/08/06
Drawn	ML/DT
Checked	PF/RP
Job No.	03117

E2.4

1 LIGHTING – FIRST FLOOR

SCALE: 1/8" = 1'-0"

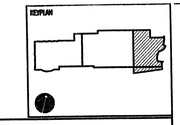

SHEET NOTES

1. OCCUPANCY SENSOR CONTROLS NORMAL FIXTURES ONLY.
2. EXISTING BOILER ROOM LIGHTING FIXTURES TO REMAIN, ADJUST FOR NEW MECHANICAL AND OTHER INSTALLATIONS. RELOCATE EXISTING CONDUITS TO AVOID INTERFERENCE WITH MECHANICAL EQUIPMENT AND INSTALLATIONS.
3. COORDINATE WITH ARCHITECTURAL REFLECTED CEILING AND ELEVATION PLANS FOR LIGHT FIXTURE LOCATIONS.
4. PROVIDE SEISMIC RESTRAINTS FOR CHAIN HUNG FIXTURES.
5. CHAIN HANG AT 10' AFF THIS ROOM. COORDINATE LIGHT FIXTURE LOCATIONS WITH MECHANICAL.
6. LIGHTING PROVIDED WITH FREEZER SEE 1/E4.1 FOR CIRCUITING.
7. CHAIN HANG LIGHTING FIXTURES AT 10' AFF. COORDINATE LIGHTING FIXTURE LOCATIONS WITH CABLE TRAY LAYOUT AND MECHANICAL.
8. NOT USED
9. PROVIDE CONTROL OF LIGHTS IN THIS ROOM WITH OCCUPANCY SENSORS IN THIS ROOM. SEE 2/E3.1.
10. CONNECT EXIT SIGNS TO ADJACENT EGRESS LIGHTING CIRCUIT.

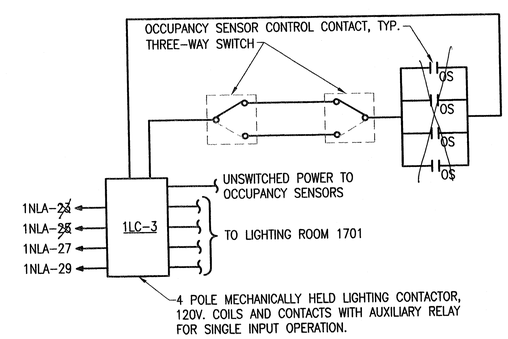

NOTES:

1. CONTACTS SHOWN IN NORMALLY OFF STATE.

2 MATERIALS MANAGEMENT LIGHTING CONTROL DIAGRAM

SCALE: NOT TO SCALE

PDC INC. ENGINEERS
1231 Gambell St., Anchorage, Alaska 99501
R1M ARCHITECTS

SOUTH PENINSULA HOSPITAL
EAST ADDITION & ALTERATIONS – PHASE 1
HOMER, ALASKA

LIGHTING – FIRST FLOOR

Revisions

Date	03/08/06
Drawn	ML/DT
Checked	PF/RP
Job No.	03117

E3.1

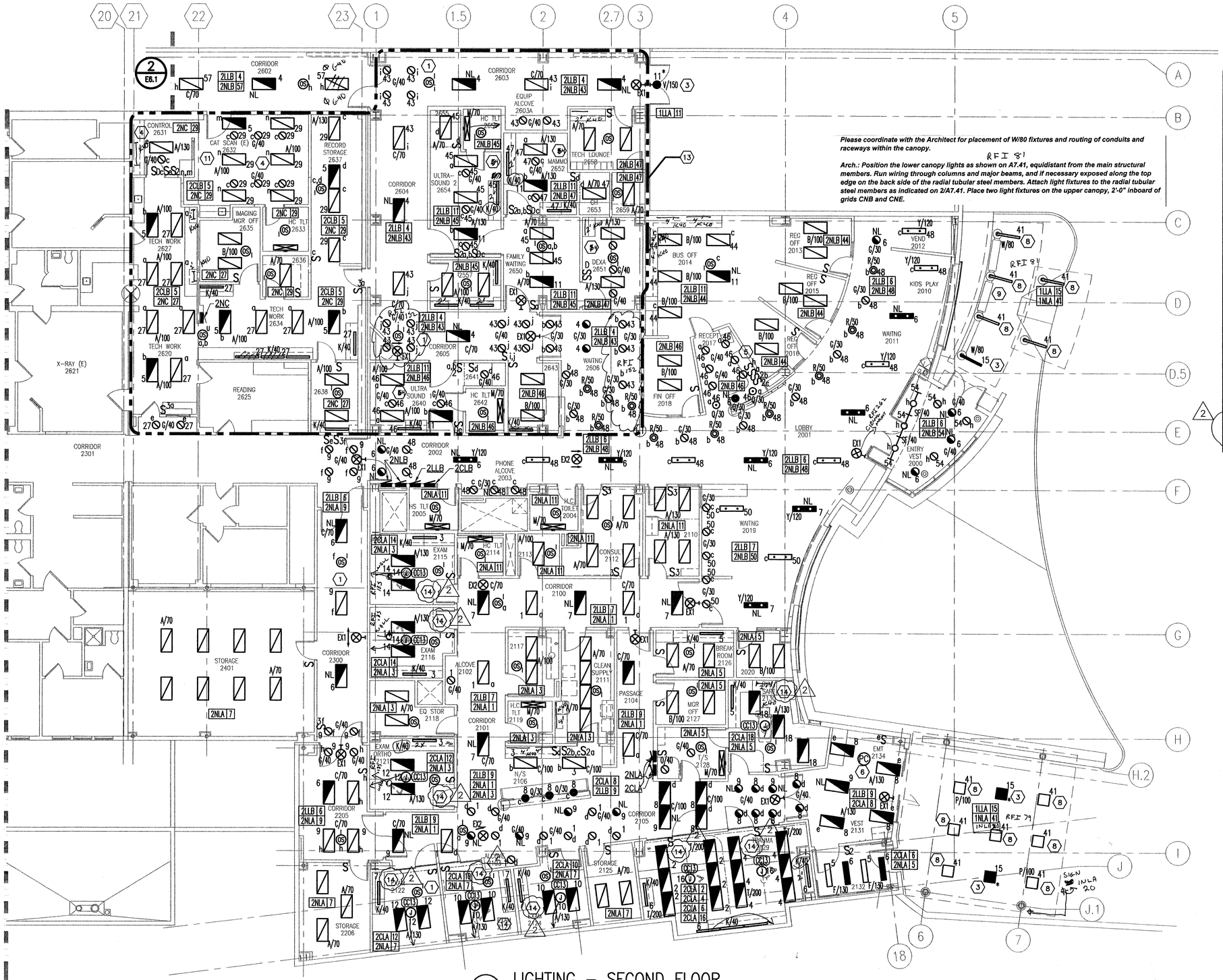

1 LIGHTING – SECOND FLOOR

SCALE: 1/8" = 1'-0"

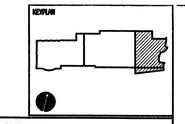

SHEET NOTES

1. 1500 FT. SQ. COVERAGE OCCUPANCY SENSOR. CONTROLS NORMAL AND OR CRITICAL FIXTURE.
2. NOT USED
3. CONNECT FIXTURE THROUGH LIGHTING CONTACTOR "1LC-1".
4. PROVIDE DIMMING BALLAST(S) AND CONTROL LOCATED IN CONTROL ROOM 2631 FOR TYPE G/40 FIXTURE(S) THIS ROOM.
5. LIGHTING SWITCHES S2b, AND S2c FOR AREAS 2606, 2001–2003, 2010, AND 2012 ARE LOCATED IN RECEPTION OFFICE 2017.
6. PHOTOCELL MOUNTED 24" ABOVE ROOF ON CONDUIT STEM FACING EAST. PENETRATE ROOF AND SEAL PENETRATION. CONNECT TO LIGHTING CONTACTOR "1LC-1". AND "1LC-2".
7. PROVIDE POWER CONNECTION TO EXAM LIGHT, TYPICAL FOR ALL EXAM ROOMS.
8. CONNECT FIXTURE THROUGH LIGHTING CONTACTOR "1LC-2".
9. PROVIDE WIRING METHOD LISTED FOR WET LOCATIONS FROM HANDHOLE AT BASE OF COLUMN TO W/80 FIXTURES, TYPICAL OF 6.
10. SEE ARCHITECTURAL REFLECTED CEILING AND ELEVATION PLANS FOR LIGHTING FIXTURE LOCATIONS.
11. DOUBLE POLE SWITCH FOR FIXTURES IN THIS ROOM LOCATED IN CONTROL ROOM 2631.
12. PROVIDE DIMMING BALLAST(S) FOR TYPE G/40 FIXTURE(S) THIS ROOM.
13. ALTERNATE AREA, SEE BID DOCUMENTS FOR ADDITIONAL INFORMATION.
14. COORDINATE LOCATION OF POWER SUPPLY CONNECTION FOR EXAM LIGHT WITH ARCHITECTURAL.

2

PDC INC. ENGINEERS
1231 Gambell St., Anchorage, Alaska 99501
R1M ARCHITECTS

SOUTH PENINSULA HOSPITAL
EAST ADDITION & ALTERATIONS – PHASE 1
HOMER, ALASKA
LIGHTING – SECOND FLOOR

Revisions
2 ADD. No.2, 04/28/06

Date	03/08/06
Drawn	RP
Checked	RP
Job No.	03117

E3.2

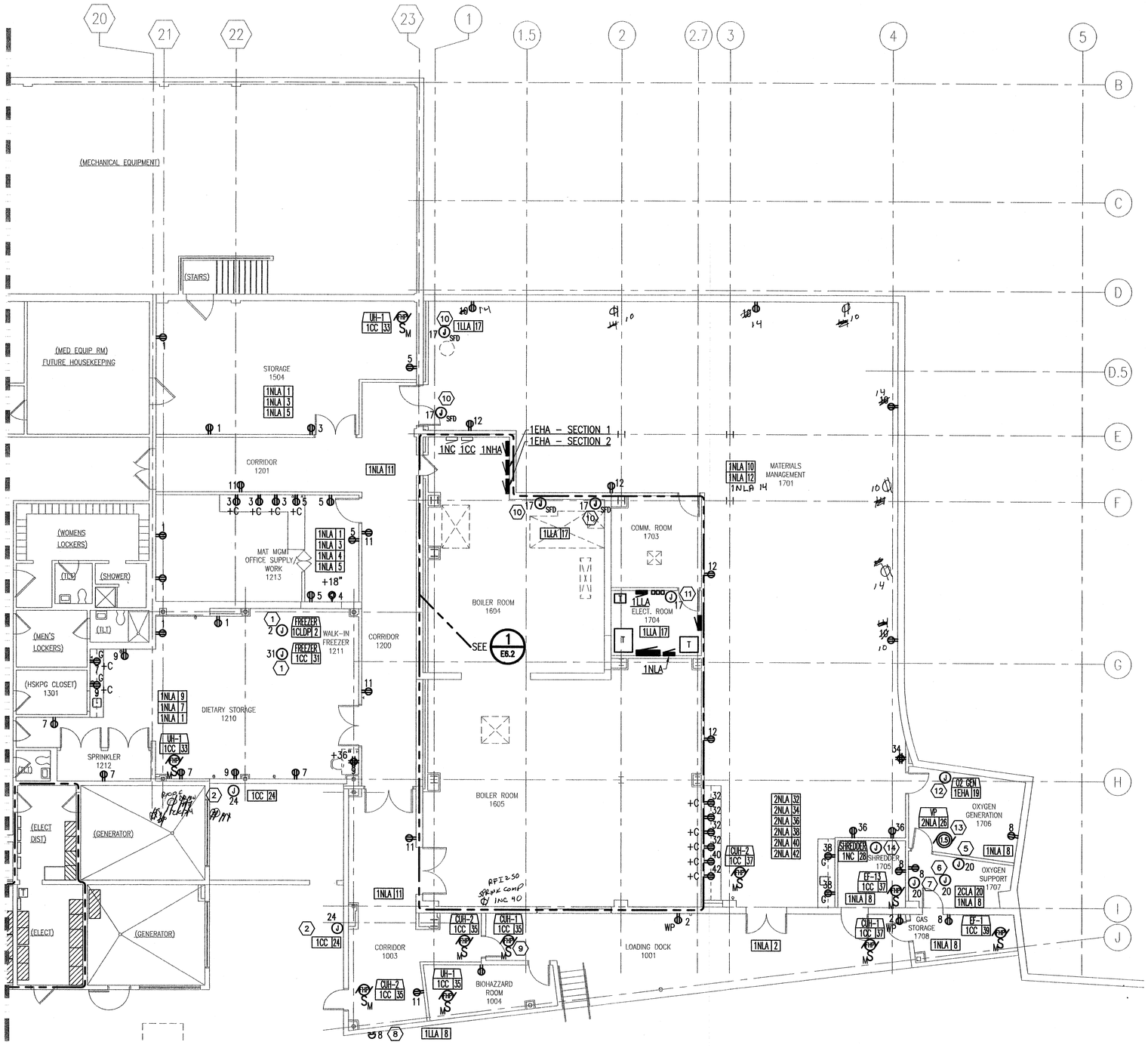

1 POWER – FIRST FLOOR
SCALE: 1/8" = 1'-0"

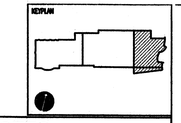

SHEET NOTES

1. DEDICATED CIRCUIT FOR NEW WALK-IN FREEZER.
2. PROVIDE HEAT TRACE FOR DOWN SPOUT, SEE 5/E8.2
3. COORDINATE MOUNTING HEIGHTS OF DEVICES WITH ARCHITECTURAL ELEVATIONS AND EQUIPMENT.
4. NOT USED
5. POWER CONNECTION TO OXYGEN AND NITROUS MONITORING PANELS, SEE M7.6 FOR PANEL LOCATIONS.
6. POWER CONNECTION FOR OXYGEN MANIFOLD, SEE M7.6 FOR MANIFOLD LOCATION.
7. POWER CONNECTION FOR NITROUS OXIDE MANIFOLD, SEE M7.6 FOR MANIFOLD LOCATION.
8. PROVIDE CIRCUIT FOR FIRE ALARM BELL.
9. CABINET UNIT HEATER LOCATED IN SOFFET.
10. PROVIDE POWER TO SMOKE FIRE DAMPER.
11. PROVIDE POWER TO SMOKE FIRE DAMPER CONTROL MODULE.
12. PROVIDE POWER O2 GENERATOR.
13. PROVIDE POWER TO VACUUM PUMP.
14. INSTALL SALVAGED SHREDDER AND ASSOCIATED ELECTRICAL EQUIPMENT. PROVIDE JUNCTION BOX ON WALL MOUNTED AT +60" AFF FOR EXTENSION OF CIRCUIT TO EQUIPMENT. PROVIDE 3#6, 1#8 GND, 1"C.

PDC INC. ENGINEERS
1231 Gambell St., Anchorage, Alaska 99501
R1M ARCHITECTS

SOUTH PENINSULA HOSPITAL
EAST ADDITION & ALTERATIONS – PHASE 1
HOMER, ALASKA
POWER – FIRST FLOOR

Revisions

Date	03/08/06
Drawn	ML/DT
Checked	PF/RP
Job No.	03117

E4.1

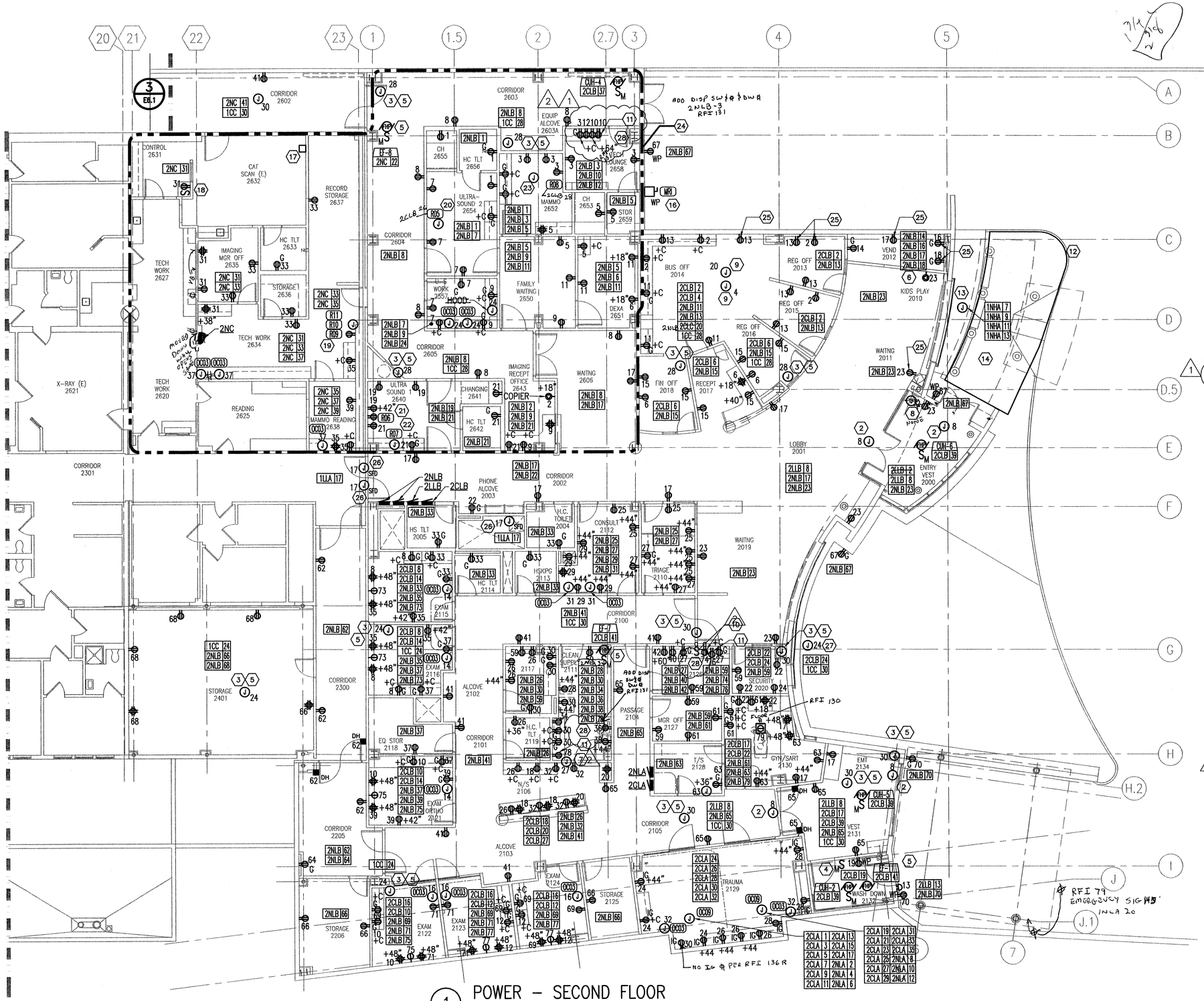

1 POWER – SECOND FLOOR
SCALE: 1/8" = 1'-0"

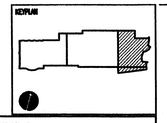

SHEET NOTES

1. COORDINATE MOUNTING HEIGHTS OF DEVICES WITH ARCHITECTURAL ELEVATIONS AND EQUIPMENT.
2. PROVIDE POWER FOR AUTOMATIC/ELECTRIC DOOR OPERATORS.
3. PROVIDE HEAT TRACE FOR ROOF AND OVERFLOW DRAINS. SEE E8.2 FOR HEAT TRACE DETAILS.
4. MOTOR SWITCH FOR EF-11 LOCATED IN CEILING SPACE.
5. EQUIPMENT LOCATED ON THE ROOF.
6. PROVIDE SAFETY SHUTTERED DUPLEX RECEPTACLE.
7. PROVIDE POWER TO MEDICAL GAS ALARM PANEL. COORDINATE WITH OWNER FOR LOCATION AND POWER REQUIREMENTS.
8. PROVIDE POWER FOR FIRE ALARM ANNUNCIATOR, SEE 1/E5.1 FOR FIRE ALARM PANEL LOCATION.
9. LOCATE JUNCTION BOX IN ACCESSIBLE CEILING FOR FUTURE POWER POLE EXPANSION.
10. PROVIDE OUTLET AT +12" AFF AND SWITCH ABOVE COUNTER FOR GARBAGE DISPOSER. COORDINATE WITH MECHANICAL.
11. PROVIDE DUPLEX RECEPTACLE AT 12" AFF FOR POINT-OF-USE WATER HEATER. COORDINATE WITH MECHANICAL.
12. APPROXIMATE AREA OF HEATED SIDEWALK.
13. BELOW GRADE NEMA 6 JUNCTION BOX WITH COVER AT FINISH GRADE LEVEL.
14. PROVIDE POWER TO SIDEWALK SNOW MELT MATS THROUGH HEAT TRACE CONTACTOR "1HT-2".
15. PROVIDE ALL REQUIRED POWER AND CONTROL WIRING TO MONITORED EQUIPMENT.
16. PROVIDE 480V, 150A DISCONNECT FOR PORTABLE MRI UNIT. SEE E7.1 FOR MORE INFORMATION.
17. EXISTING EMERGENCY SHUT DOWN CONTROL CONTACTOR TO REMAIN.
18. CONNECT NEW CONTROL SWITCH TO EXISTING EMERGENCY CONTROL CONTACTOR.
19. RELOCATED FUJIX FM/DPL DRY IMAGER – R09. EXTEND EXISTING CIRCUIT TO NEW LOCATION AS NECESSARY AND RECONNECT.
20. RELOCATED ATL 5000 ULTRASOUND UNIT – R05. EXTEND EXISTING CIRCUIT TO NEW LOCATION AS NECESSARY.
21. RELOCATED ATL 5000 ULTRASOUND UNIT – R06. EXTEND EXISTING CIRCUIT TO NEW LOCATION AS NECESSARY.
22. RELOCATED HOLOGIC DELPHI W/ BONE DENSITOMERY UNIT – R07. EXTEND EXISTING CIRCUIT TO NEW LOCATION AS NECESSARY.
23. RELOCATED GE SENOGRAPHY DMR MAMMOGRAPHY UNIT – R06. EXTEND EXISTING CIRCUIT TO NEW LOCATION AS NECESSARY.
24. ALTERNATE AREA, SEE BID DOCUMENTS FOR ADDITIONAL INFORMATION.
25. PROVIDE RECEPTACLE AT 32" TO CENTER AFF. COORDINATE WITH MECHANICAL INSTALLATION.
26. PROVIDE POWER TO SMOKE FIRE DAMPER.
27. PROVIDE POWER CONNECTION TO SECURITY CAMERA ENCLOSURE.
28. PROVIDE OUTLET AT +12" AFF FOR DISHWASHER. CONNECT TO GARBAGE DISPOSER CIRCUIT. RFI 131

PDC INC. ENGINEERS
7231 Glacier Hwy., Juneau, Alaska 99801
R1M ARCHITECTS

SOUTH PENINSULA HOSPITAL
EAST ADDITION & ALTERATIONS – PHASE 1
HOMER, ALASKA
POWER – SECOND FLOOR

Revisions
1 ADD. No.1, 04/21/06
2 ADD. No.2, 04/28/06

Date	03/08/06
Drawn	ML/DT
Checked	PF/RP
Job No.	03117

E4.2

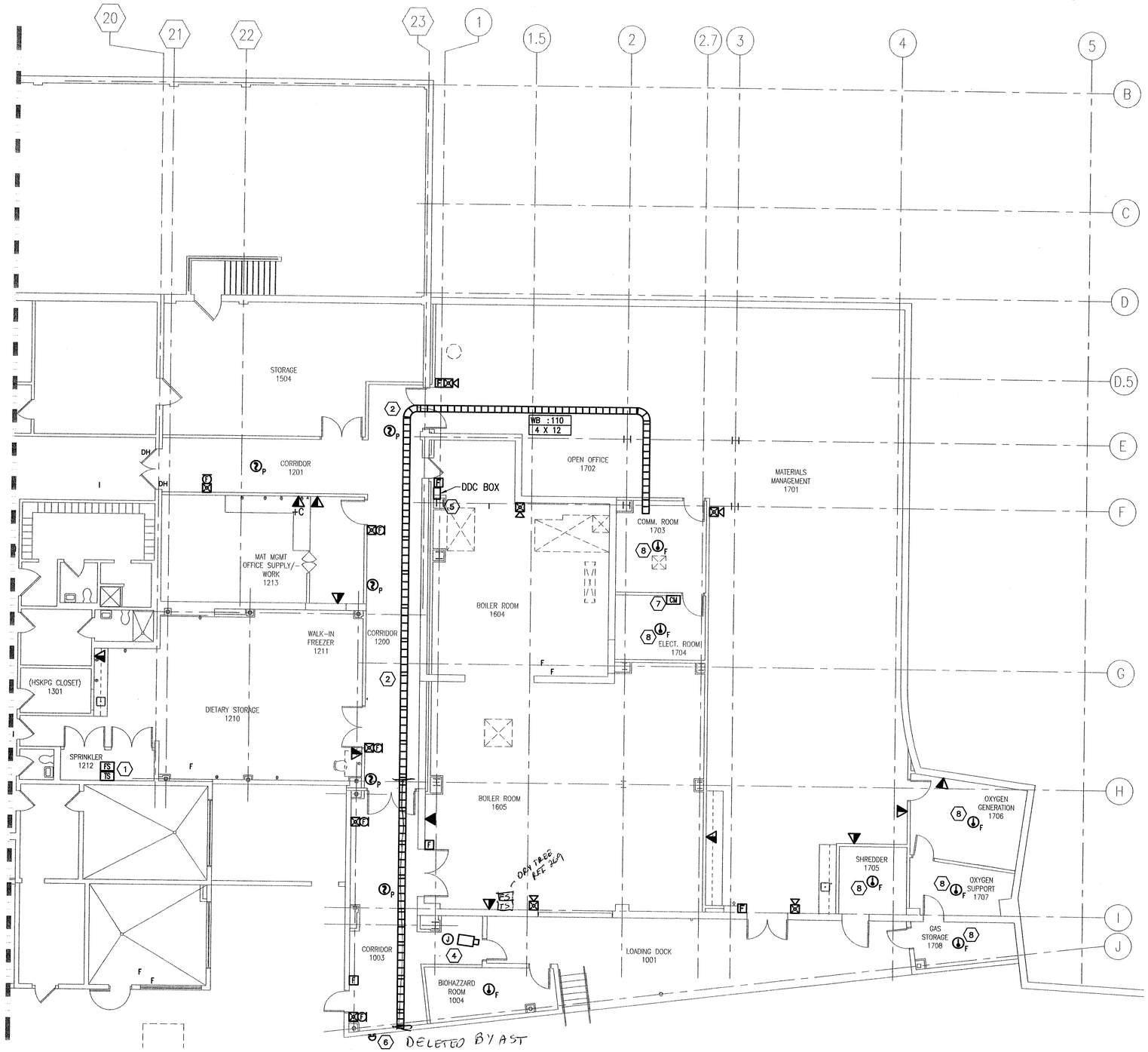

1 SIGNAL – FIRST FLOOR
SCALE: 1/8" = 1'-0"

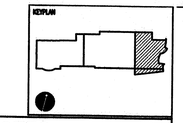

SHEET NOTES

1. PROVIDE FLOW AND TAMPER SWITCH MONITORING MODULES ON EXISTING AND NEW SPRINKLER RISERS.
2. COORDINATE ROUTING OF ELECTRICAL CABLE TRAY AND CONDUITS THROUGH EXISTING CEILING SPACES.
3. NOT USED
4. PROVIDE 3/4" CONDUIT FROM JUNCTION BOX LOCATED ABOVE CEILING TO CABLE TRAY FOR SECURITY CAMERA.
5. EXISTING DDC PANEL TO REMAIN.
6. FIRE SPRINKLER BELL, CONNECT CONTROL CIRCUIT IN SPRINKLER CLOSET, ROOM 1212.
7. CONTROL MODULE FOR SMOKE FIRE DAMPER. CONNECT TO 120V CIRCUIT AND FIRE ALARM PANEL. SEE E4.1 FOR POWER, SEE 1/E5.1 FOR FIRE ALARM.
8. COORDINATE HEAT DETECTOR LOCATION WITH MECHANICAL EQUIPMENT INSTALLATION.

PDC INC. ENGINEERS
1231 Gambell St., Anchorage, Alaska 99501
R1M ARCHITECTS

SOUTH PENINSULA HOSPITAL
EAST ADDITION & ALTERATIONS – PHASE 1
HOMER, ALASKA
SIGNAL – FIRST FLOOR

Revisions

Date	03/08/06
Drawn	PF/DT
Checked	PF/RP
Job No.	03117

E5.2

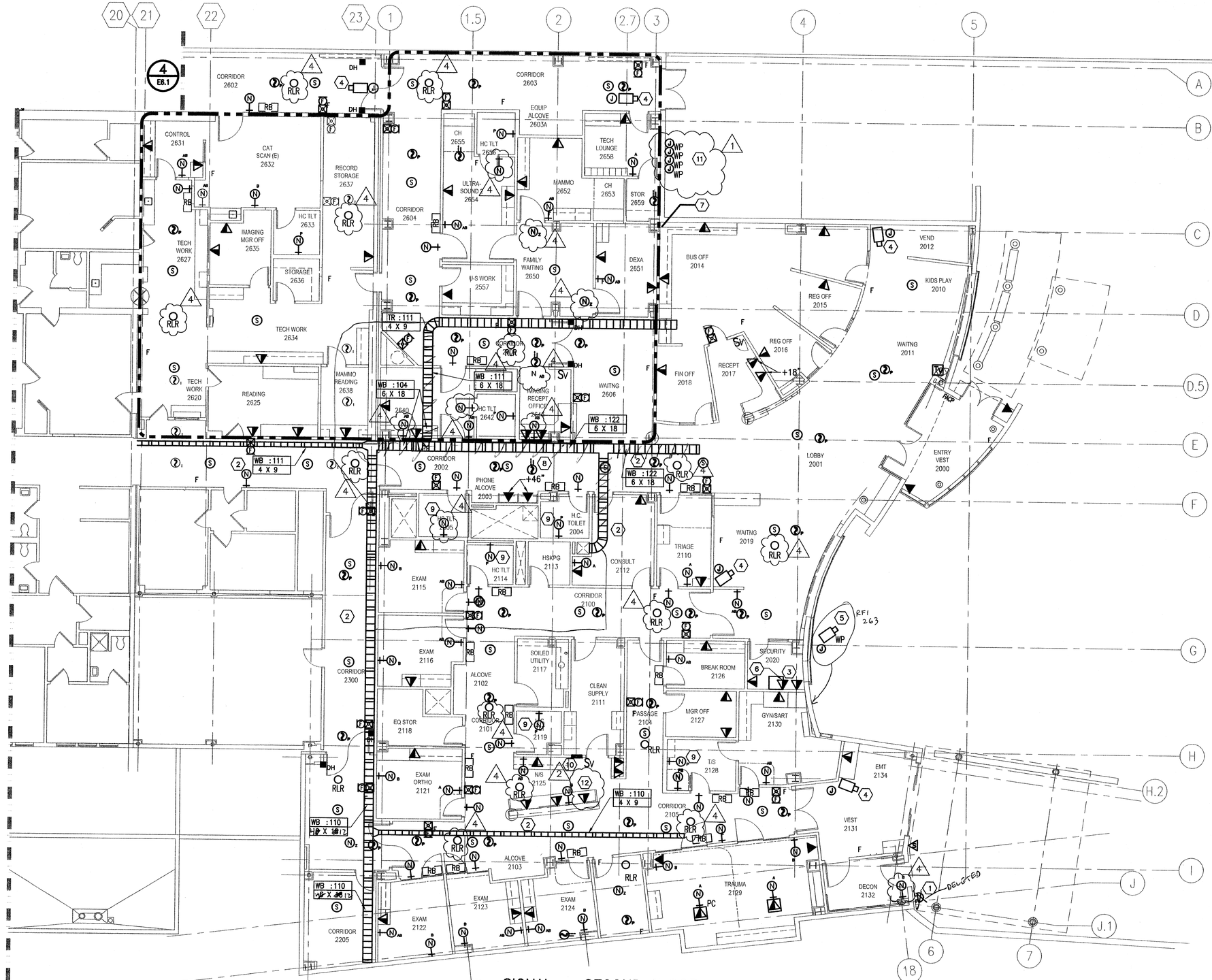

1 SIGNAL – SECOND FLOOR
SCALE: 1/8" = 1'-0"

FOR CABLE TRAY ROUTING SEE REVISED PLANS

SHEET NOTES

1. FIRE SPRINKLER BELL, CONNECT CONTROL CIRCUIT IN SPRINKLER CLOSET, ROOM 1212.
2. COORDINATE ROUTING OF ELECTRICAL CABLE TRAY AND CONDUITS THROUGH EXISTING CEILING SPACES.
3. CCTV USER STATION. ROUTE NEW CAT 5E CABLE TO RELOCATED HEAD-END EQUIPMENT IN ROOM 1703.
4. CCTV CAMERA. ROUTE NEW CABLE TO RELOCATED HEAD-END EQUIPMENT IN ROOM 1703. MOUNT CAMERA AT 7'-6" AFF.
5. PROVIDE 3/4" CONDUIT FROM WEATHERPROOF JUNCTION BOX MOUNTED AT 8'0" AFG TO HEAD END EQUIPMENT IN ROOM 1703 FOR SECURITY CAMERA. PROVIDE WP COVER ON JUNCTION BOX.
6. CCTV CONNECTION TO HEAD END IN ROOM #1703
7. ALTERNATE AREA, SEE BID DOCUMENTS FOR ADDITIONAL INFORMATION.
8. COORDINATE DUCT DETECTOR LOCATIONS WITH MECHANICAL.
9. COORDINATE NURSE CALL WITH TOILET LOCATION.
10. MEDICAL GAS ALARM PANEL. PROVIDE AND COORDINATE WITH OWNER AND ALARM PANEL MANUFACTURER FOR ALL ALARM SIGNAL CONNECTIONS, TESTING AND COMMISSIONING.
11. (1) PROVIDE 6" BY 6" WEATHERPROOF JUNCTION BOX AND 3/4" CONDUIT, ROUTE CONDUIT FROM EACH JUNCTION BOX TO CABLE TRAY FOR EXTENDED NURSE CALL, TELEPHONE, DATA, CIRCUITS AND FUTURE CONNECTIONS TO RELOCATED MRI TRAILER.
12. (2) ROUTE 18 GAUGE SHIELDED TWISTED PAIR CABLE FROM REMOTE RADIO TO BASE STATION LOCATED IN EXISTING HOSPITAL COMM. ROOM. COORDINATE BASE STATION LOCATION WITH OWNER.

PDC INC. ENGINEERS
1231 Gambell St., Anchorage, Alaska 99501
RIM ARCHITECTS

SOUTH PENINSULA HOSPITAL
EAST ADDITION & ALTERATIONS – PHASE 1
HOMER, ALASKA
SIGNAL – SECOND FLOOR

Revisions
1 ADD. No.1, 04/21/06
2 ADD. No.2, 04/28/06
4 ADD. No.4, 05/01/06

Date	03/08/06
Drawn	PF/DT
Checked	PF/RP
Job No.	03117

E5.3

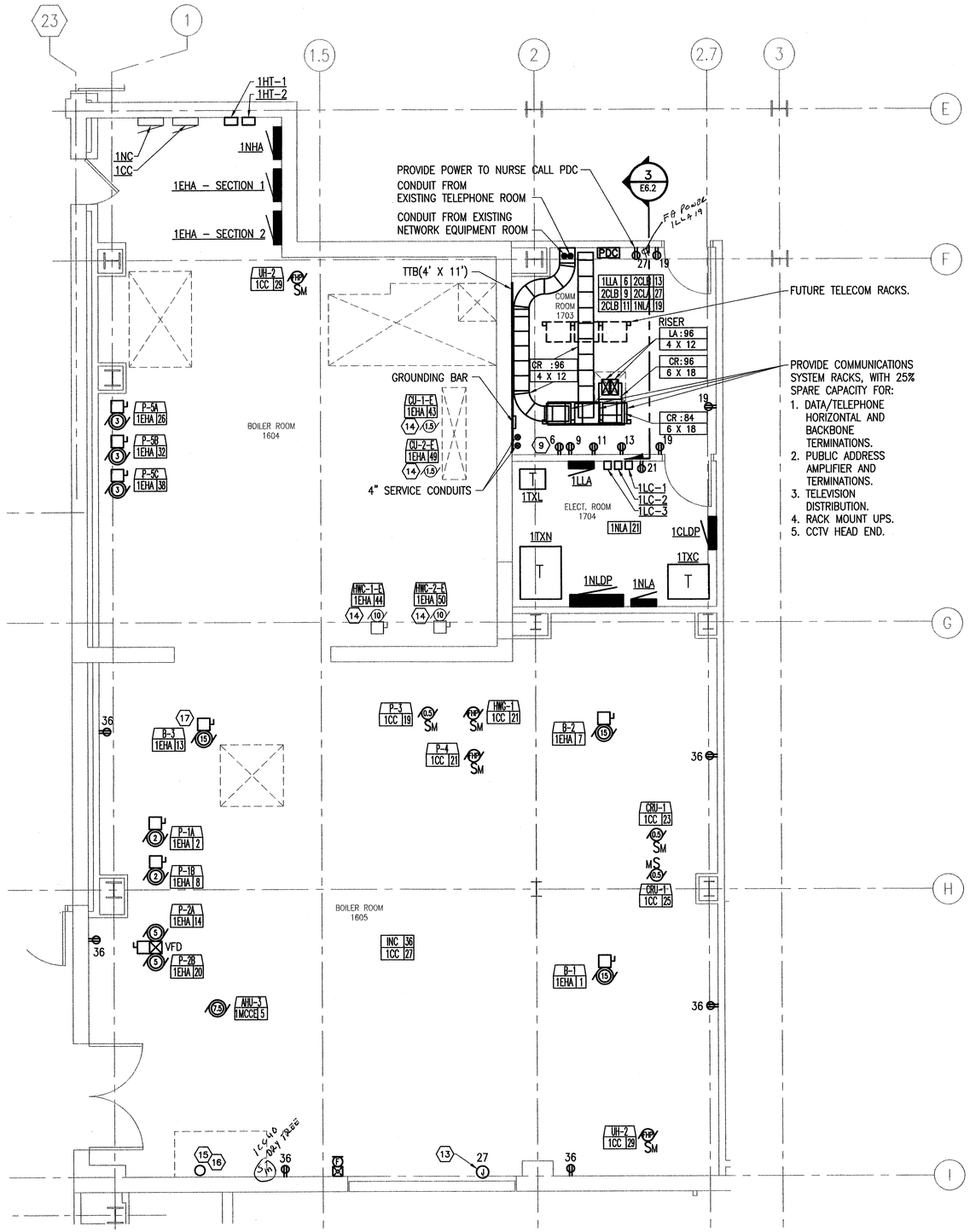

1 LARGE SCALE MECHANICAL/ELECTRICAL PLAN
SCALE: 1/4" = 1'-0"

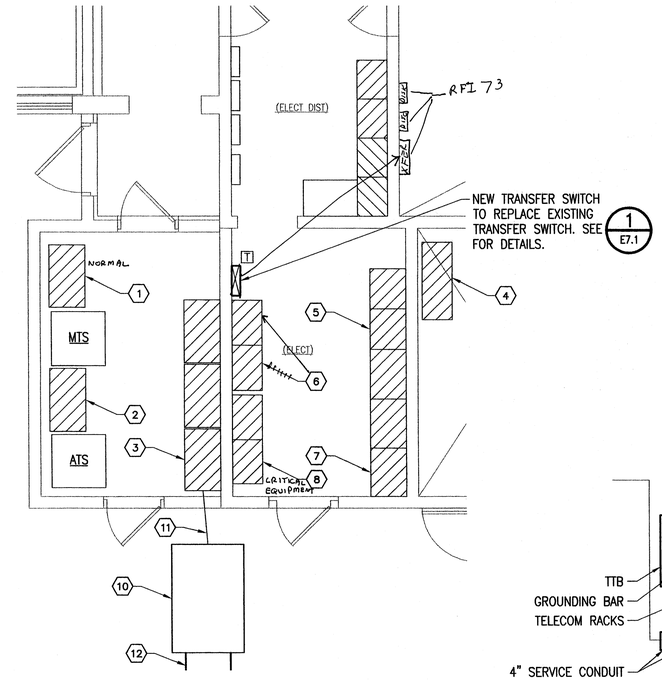

2 LARGE SCALE ELECTRICAL ROOM
SCALE: 1/4" = 1'-0"

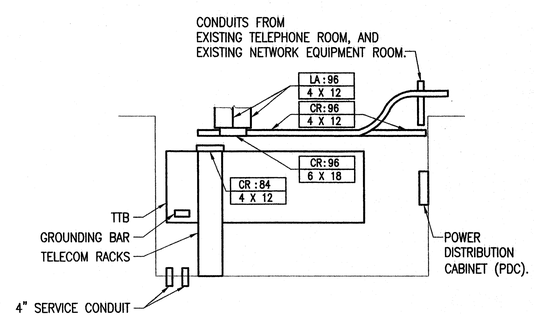

3 TELECOM ROOM – ELEVATION
SCALE: 1/4" = 1'-0"

SHEET NOTES

1. (E) NORMAL SERVICE DISTRIBUTION SWITCHBOARD
2. (E) CRITICAL LIGHTING & POWER DISTRIBUTION SWITCHBOARD #2
3. (E) MAIN SERVICE SWITCHBOARD
4. (E) EMERGENCY SERVICE SWITCHBOARD
5. (E) MAIN SERVICE SWITCHBOARD SUB DISTRIBUTION SECTION #1
6. (E) CRITICAL LIGHTING & POWER DISTRIBUTION SWITCHBOARD
7. (E) MAIN SERVICE SWITCHBOARD
8. (E) CRITICAL EQUIUPMENT DISTRIBUTION SWITCHBOARD (CEDS)
9. DEDICATED LIFE SAFETY OUTLET FOR COMMUNICATION SYSTEMS USED FOR ISSUING INSTRUCTIONS DURING EMERGENCY CONDITIONS. NO OTHER EQUIPMENT SHALL BE CONNECTED TO THIS OUTLET.
10. SERVICE CABLE HANDHOLE. SEE DETAIL 4, E8.1.
11. INTERCEPT EXISTING SERVICE CONDUITS AND ROUTE TO NEW HANDHOLE.
12. NEW SERVICE LATERAL DUCT BANK. SEE DETAIL 2, E8.1.
13. PROVIDE POWER TO DECONTAMINATION SHOWER WASTE WATER HOLDING TANK ALARM PANEL, COORDINATE LOCATION WITH MECHANICAL.
14. PROVIDE CIRCUITS FROM "1EHA" TO EXISTING EQUIPMENT, SEE PANEL "1EHA" SCHEDULE.
15. DEDICATED SPACE FOR FUTURE FIRE PUMP SERVICE EQUIPMENT AND CONTROLLER
16. PROVIDE 4" CONDUIT FOR FUTURE FIRE PUMP. EXTEND CONDUIT 12" AFF WITH THREADED PIPE CAP.
17. ~~DEDICATED SPACE FOR FUTURE EQUIPMENT.~~
18. COORDINATE NEW ELECTRICAL WORK IN BOILER ROOM WITH MECHANICAL. . (1)

PDC INC. ENGINEERS
1231 Gambell St., Anchorage, Alaska 99501
RIM ARCHITECTS

SOUTH PENINSULA HOSPITAL
EAST ADDITION & ALTERATIONS – PHASE 1
HOMER, ALASKA
LARGE SCALE – MECHANICAL PLAN

Revisions
1 ADD. No.1, 04/21/06

Date	03/08/06
Drawn	PF/ML
Checked	PF/RP
Job No.	03117

E6.2

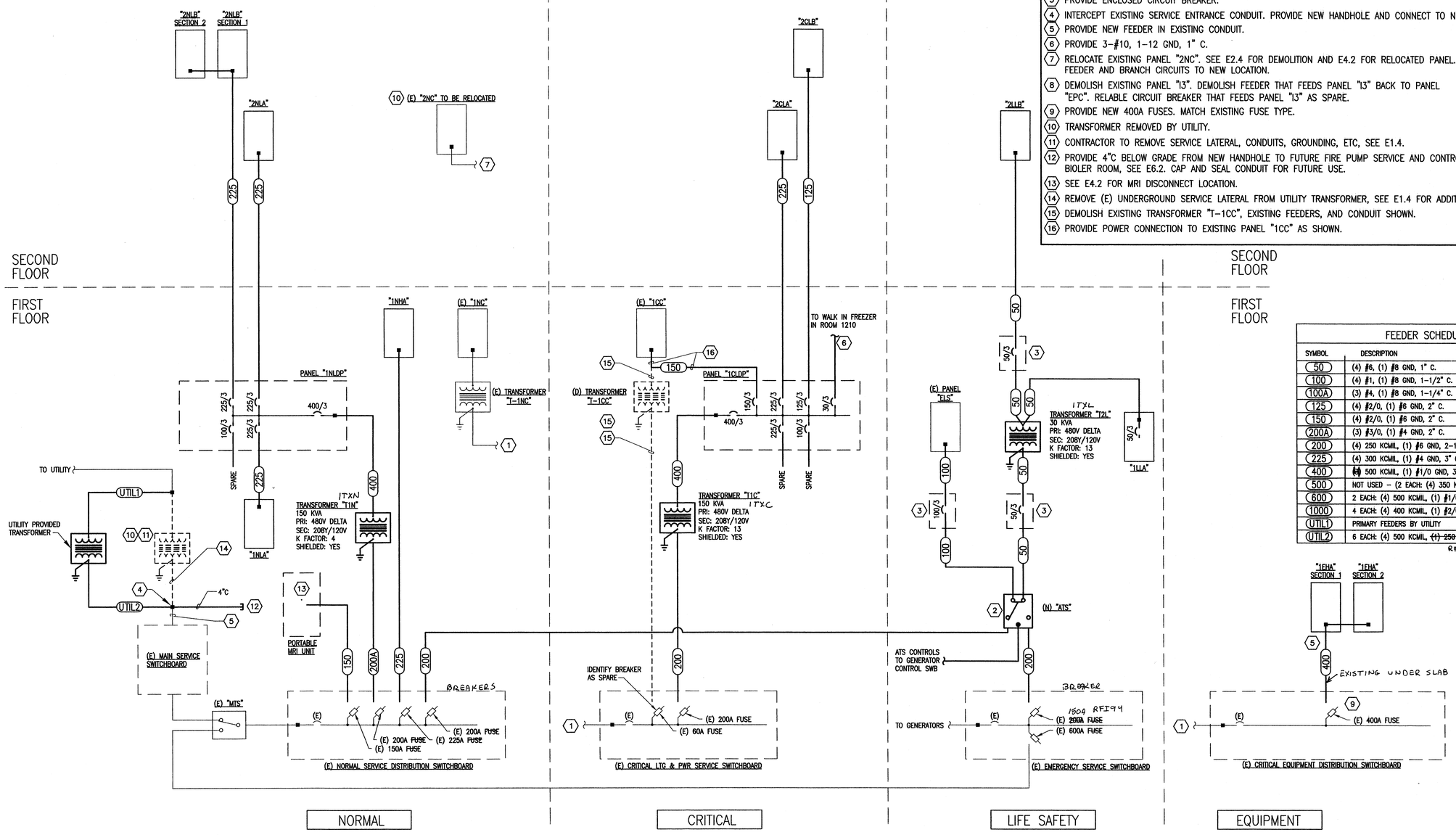

SHEET NOTES

1. TO EXISTING PANEL, EXISTING DISTRIBUTION BOARD, OR EXISTING TRANSFER SWITCH.
2. NEW 200A AUTOMATIC TRANSFER SWITCH "ATS" TO REPLACE EXISTING 100A AUTOMATIC TRANSFER SWITCH "ATS". PROVIDE TEMPORARY CONNECTION TO PANEL "ELS" TO CRITICAL BRANCH DURING REPLACEMENT. DEMOLISH EXISTING TRANSFER SWITCH "ATS" AND FEEDER BACK TO "EMERGENCY SERVICE SWITCHBOARD". PROVIDE 200A, 3-POLE BREAKER IN "EMERGENCY SERVICE SWITCHBOARD" AND NEW FEEDER TO NEW AUTOMATIC TRANSFER SWITCH "ATS".
3. PROVIDE ENCLOSED CIRCUIT BREAKER.
4. INTERCEPT EXISTING SERVICE ENTRANCE CONDUIT. PROVIDE NEW HANDHOLE AND CONNECT TO NEW SERVICE LATERAL.
5. PROVIDE NEW FEEDER IN EXISTING CONDUIT.
6. PROVIDE 3-#10, 1-12 GND, 1" C.
7. RELOCATE EXISTING PANEL "2NC". SEE E2.4 FOR DEMOLITION AND E4.2 FOR RELOCATED PANEL. EXTEND EXISTING FEEDER AND BRANCH CIRCUITS TO NEW LOCATION.
8. DEMOLISH EXISTING PANEL "13". DEMOLISH FEEDER THAT FEEDS PANEL "13" BACK TO PANEL "EPC". RELABLE CIRCUIT BREAKER THAT FEEDS PANEL "13" AS SPARE.
9. PROVIDE NEW 400A FUSES. MATCH EXISTING FUSE TYPE.
10. TRANSFORMER REMOVED BY UTILITY.
11. CONTRACTOR TO REMOVE SERVICE LATERAL, CONDUITS, GROUNDING, ETC, SEE E1.4.
12. PROVIDE 4"C BELOW GRADE FROM NEW HANDHOLE TO FUTURE FIRE PUMP SERVICE AND CONTROLLER LOCATION IN BIOLER ROOM, SEE E6.2. CAP AND SEAL CONDUIT FOR FUTURE USE.
13. SEE E4.2 FOR MRI DISCONNECT LOCATION.
14. REMOVE (E) UNDERGROUND SERVICE LATERAL FROM UTILITY TRANSFORMER, SEE E1.4 FOR ADDITIONAL INFORMATION.
15. DEMOLISH EXISTING TRANSFORMER "T-1CC", EXISTING FEEDERS, AND CONDUIT SHOWN.
16. PROVIDE POWER CONNECTION TO EXISTING PANEL "1CC" AS SHOWN.

FEEDER SCHEDULE

SYMBOL	DESCRIPTION
50	(4) #6, (1) #8 GND, 1" C.
100	(4) #1, (1) #8 GND, 1-1/2" C.
100A	(3) #4, (1) #8 GND, 1-1/4" C.
125	(4) #2/0, (1) #6 GND, 2" C.
150	(4) #2/0, (1) #6 GND, 2" C.
200A	(3) #3/0, (1) #4 GND, 2" C.
200	(4) 250 KCMIL, (1) #6 GND, 2-1/2" C.
225	(4) 300 KCMIL, (1) #4 GND, 3" C.
400	(4) 500 KCMIL, (1) #1/0 GND, 3" C.
500	NOT USED - (2 EACH: (4) 350 KCMIL, (1) #2 GND, 3" C.)
600	2 EACH: (4) 500 KCMIL, (1) #1/0 GND, 3-1/2" C.
1000	4 EACH: (4) 400 KCMIL, (1) #2/0 GND, 3" C.
UTIL1	PRIMARY FEEDERS BY UTILITY
UTIL2	6 EACH: (4) 500 KCMIL, ~~(1) 250 KCMIL~~ GND, 4"C (DUCT BANK)

RFI 66

1 PARTIAL POWER RISER DIAGRAM - EXISTING AND NEW WORK

SCALE: NOT TO SCALE

PDC INC. ENGINEERS
1231 Gambell St., Anchorage, Alaska 99501
R1M ARCHITECTS

SOUTH PENINSULA HOSPITAL
EAST ADDITION & ALTERATIONS - PHASE 1
HOMER, ALASKA
POWER RISER DIAGRAM - EXISTING AND NEW WORK

Revisions

Date	03/08/06
Drawn	PF/ML
Checked	PF/RP
Job No.	03117

E7.1

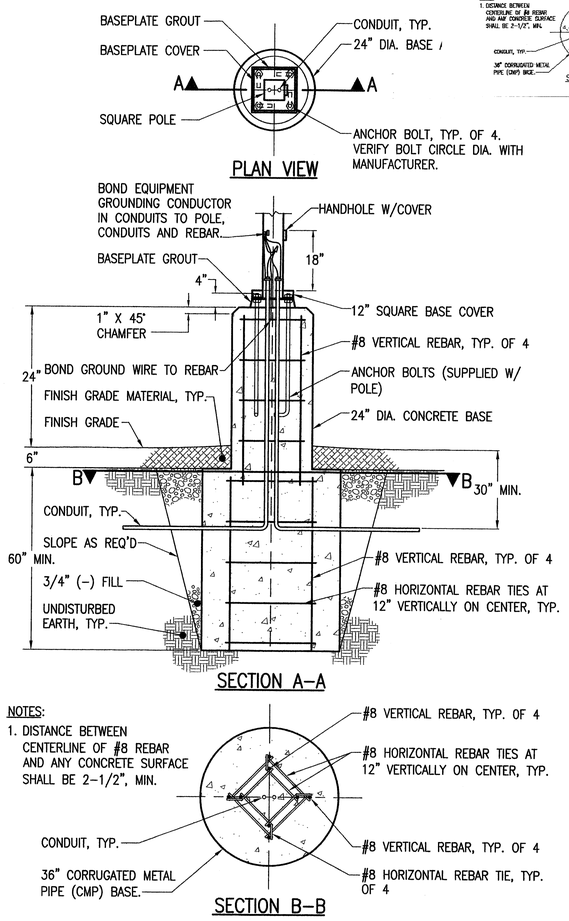

1 POLE BASE DETAIL
SCALE: NOT TO SCALE

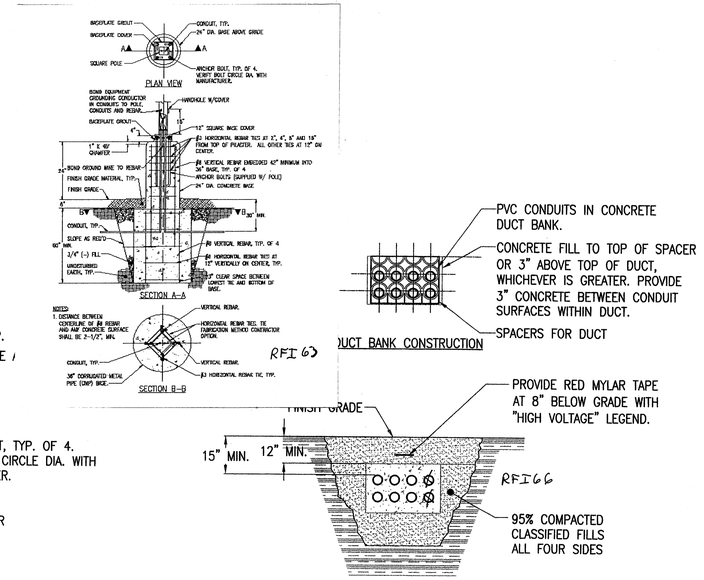

2 ELECTRICAL DUCT BANK
SCALE: NOT TO SCALE

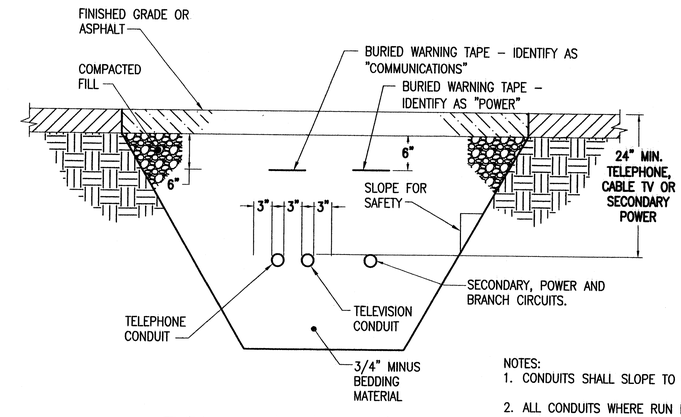

NOTES:
1. CONDUITS SHALL SLOPE TO DRAIN AT HANDHOLES.
2. ALL CONDUITS WHERE RUN PARALLEL TO SIDEWALK, ROAD OR PARKING AREA, RUN WITHIN 5' OF EDGE OF CURB OR SIDEWALK.

3 TYPICAL BELOW GRADE ELECTRICAL INSTALLATION
SCALE: NOT TO SCALE

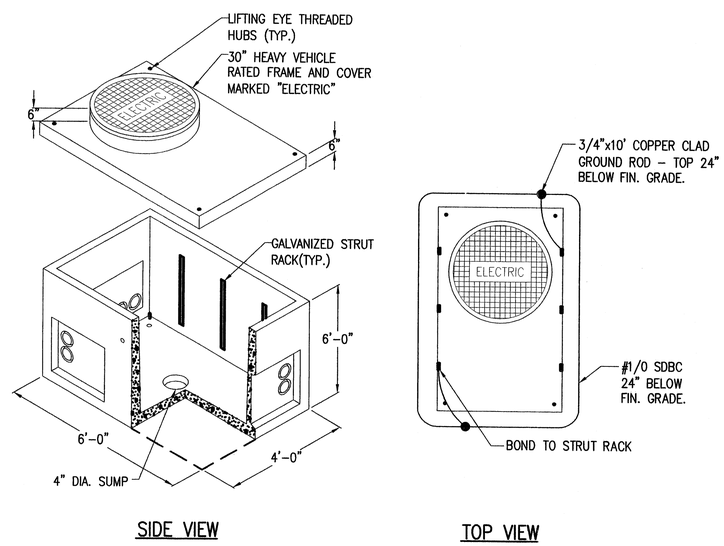

4 SERVICE CABLE HANDHOLE DETAIL
SCALE: NOT TO SCALE

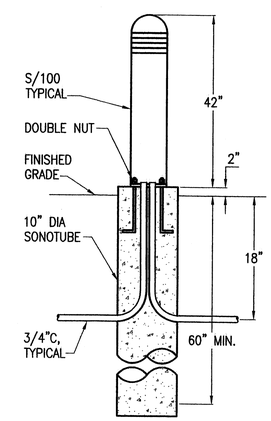

5 BOLLARD BASE DETAIL
SCALE: NOT TO SCALE

PDC INC. ENGINEERS
1231 Gambell St., Anchorage, Alaska 99501
R1M ARCHITECTS

SOUTH PENINSULA HOSPITAL
EAST ADDITION & ALTERATIONS - PHASE 1
HOMER, ALASKA
SITE WORK DETAILS

Revisions

Date	03/08/06
Drawn	DT
Checked	PF/RP
Job No.	03117

E8.1

VOLTAGE: 208Y/120V, 3PH, 4W
BUS: 400
MAIN: 400A CB

PANEL "1NLDP" SCHEDULE

LOCATION: "ELECTRICAL ROOM 1704"

MIN. A.I.C. RATING: 10,000
ENCLOSURE: NEMA 1
MOUNTING: SURFACE

LOAD DESCRIPTION	NOTE	KVA	LOAD	AMP	P	CKT	CKT	AMP	P	LOAD DESCRIPTION	NOTE	KVA	LOAD
PANEL ~~1NLA~~ 2NLA		31.64	F	225	3	1	2	225	3	PANEL 2NLB		79.29	F
			–	–	–	3	4	–	–				–
			–	–	–	5	6	–	–				–
PANEL ~~2NLA~~ 1NLA		17.51	F	225	3	7	8		3	SPACE W/ HARDWARE			
			–	–	–	9	10	–	–				–
			–	–	–	11	12	–	–				–
SPARE			S	125	3	13	14		3	SPACE W/ HARDWARE			
			–	–	–	15	16	–	–				–
			–	–	–	17	18	–	–				–
SPACE W/ HARDWARE					3	19	20		3	SPACE W/ HARDWARE			
			–	–	–	21	22	–	–				–
			–	–	–	23	24	–	–				–
SPACE W/ HARDWARE					3	25	26		3	SPACE W/ HARDWARE			
			–	–	–	27	28	–	–				–
			–	–	–	29	30	–	–				–

	SUMMARY BY LOAD TYPE	CONNECTED KVA				TOTAL KVA	NEC %	NEC TOTAL
		PH A	PH B	PH C	FEED			
L	LIGHTING				28.3	28.3	1.25	35.3
R	RECEPTACLES				53.9	53.9	10K+50%	31.9
M	MOTORS				2.4	2.4	1.00	2.4
LM	LARGEST MOTOR						1.25	
C	CONTINUOUS						1.25	
N	NON-CONTINUOUS				40.7	40.7	1.00	40.7
S	SPARE				0.4	0.4	1.00	0.4
X	NON-COINCIDENT				2.9	2.9	0.00	
O	OTHER						1.00	
F	FEEDER	42.4	42.7	43.3				
TOTAL KVA (PHASE)		42.4	42.7	43.3		128.4		110.7
TOTAL AMPERES		353.5	355.5	360.5		356.5		307.2
PHASE BALANCE, ABC		A–B	B–C	C–A				
PERCENT		0.6%	1.4%	2.0%				

NOTES:

VOLTAGE: 208Y/120V, 3PH, 4W
BUS: 225
MAIN: LUGS ONLY – FED BY 225A CB

PANEL "1NLA" SCHEDULE

LOCATION: "ELECTRICAL ROOM"

MIN. A.I.C. RATING: 10,000
ENCLOSURE: NEMA 1
MOUNTING: SURFACE

LOAD DESCRIPTION	NOTE	KVA	LOAD	AMP	P	CKT	CKT	AMP	P	LOAD DESCRIPTION	NOTE	KVA	LOAD
REC. – RM: 1504, 1213, 1210		1.08	R	20	1	1	2	20	1	REC. – OUTSIDE LOADING DOCK		0.36	R
REC. – RM: 1504, 1213		0.72	R	20	1	3	4	20	2	REC. – RM: 1213 – COPIER		3.28	N
REC. – RM: 1504, 1213		0.90	R	20	1	5	6	–	–				–
REC. – RM: 1210		0.90	R	20	1	7	8	20	1	REC. – RM: 1705-1708		0.72	R
REC. – RM: 1210		0.90	R	20	1	9	10	20	1	REC. – RM: 1701		0.72	R
REC. – CORRIDOR: 1201, 1201, 1002, 1003		0.90	R	20	1	11	12	20	1	REC. – RM: 1701		0.72	R
AHU-1 – ROOF		1.92	N	20	1	13	14	20	1	SPARE			S
AHU-2 – ROOF	1	1.92	N	20	1	15	16	20	1	SPARE			S
LTG – ROOM 1703, 1704		0.35	L	20	1	17	18	20	1	SPARE OUTSIDE POLE & SIGN			S
REC. – RM: 1703		0.54	R	20	1	19	20	~~20~~	~~1~~	~~SPARE~~ EMERGENCY SIGNS			S
REC. – RM: 1704		0.18	R	20	1	21	22	20	1	SPARE SOUTH LOT LIGHTING			S
LTG – ROOM: 1701		1.40	L	20	1	23	24	20	2	OUTSIDE LIGHTS, BOLLARDS	2,3	0.75	L
LTG – ROOM: 1701		1.10	L	20	1	25	26	–	–				–
LTG – ROOM: 1701		1.20	L	20	1	27	28	20	2	OUTSIDE LIGHTS	2,3	0.75	L
LTG – ROOM: 1701		1.00	L	20	1	29	30	–	–				–
LTG – ROOM: 1504, 1213		0.91	L	20	1	31	32	20	2	OUTSIDE LIGHTS	2,3	0.75	L
LTG – ROOM: 1210		0.70	L	20	1	33	34	–	–				–
LTG – ROOM: 1003, 1200, 1201		0.63	L	20	1	35	36	20	1	REC. – RM: 1605		1.08	R
LTG – ROOM: 1705-1708		0.70	L	20	1	37	38	20	1	OUTSIDE SIGN	2	1.92	L
LTG – ROOM: 1605		0.63	L	20	1	39	40	20	1	~~REC. – OUTSIDE POLE, SIGN~~ SPARE	2	0.36	R
LTG – LOADING DOCK 1000, EMT, CANOPY	2,3	1.40	L	20	1	41	42	20	1	LIGHTING CONTACTOR "1LC-2"		0.25	N

	SUMMARY BY LOAD TYPE	CONNECTED KVA				TOTAL KVA	NEC %	NEC TOTAL
		PH A	PH B	PH C	FEED			
L	LIGHTING	5.4	3.3	5.5		14.2	1.25	17.7
R	RECEPTACLES	3.6	2.9	3.6		10.1	10K+50%	10.0
M	MOTORS						1.00	
LM	LARGEST MOTOR						1.25	
C	CONTINUOUS						1.25	
N	NON-CONTINUOUS	1.9	3.6	1.9		7.4	1.00	7.4
S	SPARE						1.00	
X	NON-COINCIDENT						0.00	
O	OTHER						1.00	
F	FEEDER							
TOTAL KVA (PHASE)		10.9	9.7	11.0		31.6		35.1
TOTAL AMPERES		90.8	80.9	91.8		87.8		97.6
PHASE BALANCE, ABC		A–B	B–C	C–A				
PERCENT		11.2%	12.3%	1.1%				

NOTES:
1. FUTURE LOAD
2. PROVIDE 2#8, 1#8 GND, 3/4"C
3. CONNECT THROUGH LIGHTING CONTACTOR "1LC-2"

VOLTAGE: 208Y/120V, 3PH, 4W
BUS: 225
MAIN: LUGS ONLY – FED BY 225A CB

PANEL "2NLA" SCHEDULE

LOCATION: "PASSAGE 2104"

MIN. A.I.C. RATING: 10,000
ENCLOSURE: NEMA 1
MOUNTING: RECESSED

LOAD DESCRIPTION	NOTE	KVA	LOAD	AMP	P	CKT	CKT	AMP	P	LOAD DESCRIPTION	NOTE	KVA	LOAD
LTG – RM: 2100-2104		0.75	L	20	1	1	2	20	1	HILL ROM POWER COLUMN #1 – RM: 2129		0.80	R
LTG – RM: 2115-2119, 2106, 2111, 2121		1.01	L	20	1	3	4	20	1	HILL ROM POWER COLUMN #1 – RM: 2129		0.80	R
LTG – RM: 2020, 2126-2128, 2130, 2132		1.03	L	20	1	5	6	20	1	HILL ROM POWER COLUMN #1 – RM: 2129		0.80	R
LTG – RM: 2401, 2206, 2122-2125		1.03	L	20	1	7	8	20	1	HILL ROM POWER COLUMN #2 – RM: 2129		0.80	R
LTG – RM: 2205, 2300		0.60	L	20	1	9	10	20	1	HILL ROM POWER COLUMN #2 – RM: 2129		0.80	R
LTG – RM: 2004, 2005, 2111-2114		1.11	L	20	1	11	12	20	1	HILL ROM POWER COLUMN #2 – RM: 2129		0.80	R
SPARE			S	20	1	13	14	20	1	SPARE			S
SPARE			S	20	1	15	16	20	1	SPARE			S
SPARE			S	20	1	17	18	20	1	SPARE			S
SPACE W/ HARDWARE					1	19	20		1	SPACE W/ HARDWARE			
SPACE W/ HARDWARE					1	21	22		1	SPACE W/ HARDWARE			
SPACE W/ HARDWARE					1	23	24		1	SPACE W/ HARDWARE			
SPACE W/ HARDWARE					1	25	26	20	3	VACUUM PUMP – 1706		2.38	M
SPACE W/ HARDWARE					1	27	28	–	–				–
SPACE W/ HARDWARE					1	29	30	–	–				–
SPACE W/ HARDWARE					1	31	32	20	1	REC – MAT MANAGEMENT		0.72	R
SPACE W/ HARDWARE					1	33	34	20	1	REC – MAT MANAGEMENT		0.36	R
SPACE W/ HARDWARE					1	35	36	20	1	REC – MAT MANAGEMENT		0.36	R
SPACE W/ HARDWARE					1	37	38	20	1	REC – MAT MANAGEMENT		0.36	R
SPACE W/ HARDWARE					1	39	40	20	1	REC – MAT MANAGEMENT – MICR		1.50	R
SPACE W/ HARDWARE					1	41	42	20	1	REC – MAT MANAGEMENT – COFFEE		1.50	R

	SUMMARY BY LOAD TYPE	CONNECTED KVA				TOTAL KVA	NEC %	NEC TOTAL
		PH A	PH B	PH C	FEED			
L	LIGHTING	1.8	1.6	2.1		5.5	1.25	6.9
R	RECEPTACLES	2.7	3.5	3.5		9.6	10K+50%	9.6
M	MOTORS	0.8	0.8	0.8		2.4	1.00	2.4
LM	LARGEST MOTOR						1.25	
C	CONTINUOUS						1.25	
N	NON-CONTINUOUS						1.00	
S	SPARE						1.00	
X	NON-COINCIDENT						0.00	
O	OTHER						1.00	
F	FEEDER							
TOTAL KVA (PHASE)		5.3	5.9	6.4		17.5		18.9
TOTAL AMPERES		43.7	48.8	53.2		48.6		52.4
PHASE BALANCE, ABC		A–B	B–C	C–A				
PERCENT		10.5%	9.1%	19.5%				

NOTES:

VOLTAGE: 208Y/120V, 3PH, 4W
BUS: 225
MAIN: 225A CB W/ FEED-THRU LUGS TO PNL "2NLB – SECTION 2"

PANEL "2NLB – SECTION 1" SCHEDULE

LOCATION: "CORRIDOR 2002"

MIN. A.I.C. RATING: 10,000
ENCLOSURE: NEMA 1
MOUNTING: RECESSED

LOAD DESCRIPTION	NOTE	KVA	LOAD	AMP	P	CKT	CKT	AMP	P	LOAD DESCRIPTION	NOTE	KVA	LOAD
REC. – RM: 2652, 2654-2656		1.08	R	20	1	1	2	20	2	REC. – RM: 2643 – COPIER		3.33	N
REC. – RM: 2652, 2658		1.08	R	20	1	3	4	–	–				–
REC. – RM: 2651-2653, 2659		1.08	R	20	1	5	6	20	1	REC. – RM: 2651 – OPERATOR CONSOLE		1.00	N
REC. – RM: 2557, 2654		1.08	R	20	1	7	8	20	1	REC. – CORRIDOR: 2603-2606		1.08	R
REC. – RM: 2557, 2643, 2650		1.08	R	20	1	9	10	20	1	REC. – RM: 2658 – MICROWAVE		1.20	N
REC. – RM: 2650, 2651, 2014		1.80	R	20	1	11	12	20	1	REC. – RM: 2658 – REFRIGERATOR		1.20	N
REC. – RM: 2013-2015		1.08	R	20	1	13	14	20	1	REC. – RM: 2012 – VENDING MACHINE		1.92	N
REC. – RM: 2016-2618		1.08	R	20	1	15	16	20	1	REC. – RM: 2012 – VENDING MACHINE		1.92	N
REC. – CORRIDOR: 2001, 2001, 2003, 2012		1.08	R	20	1	17	18	20	1	REC. – RM: 2012 – VENDING MACHINE		1.92	N
REC. – CRM: 2640		0.72	R	20	1	19	20	20	1	J BOX. – RM: 2014		1.92	N
REC. – CRM: 2640		0.90	R	20	1	21	22	20	1	REC. – RM: 2003 – WATER COOLER		1.50	N
REC. – RM: 200, 2001, 2011, 2019		1.08	R	20	1	23	24	20	1	VIEW BOXES – RM: 2557		0.60	N
REC. – RM: 2110, 2112		1.08	R	20	1	25	26	20	1	REC. – RM: 2125, 2117, 2119		1.08	R
REC. – RM: 2110, 2112, 2126		1.08	R	20	1	27	28	20	1	REC. – RM: 2111 – ICE MACHINE		1.50	N
REC. – RM: 2112		1.08	R	20	1	29	30	20	1	REC. – RM: 2111, 2117		1.08	R
VIEW BOXES – RM: 2112		0.40	N	20	1	31	32	20	1	REC. – RM: 2125		0.72	R
REC. – RM: 2004, 2005, 2113-2115		1.08	R	20	1	33	34	20	1	REC. – RM: 2111 – REFRIGERATOR		1.20	N
REC. –RM: 2115, 2116		1.08	R	20	1	35	36	20	1	REC. – RM: 2111 – REFRIGERATOR		1.20	N
REC. – RM: 2116, 2118		0.72	R	20	1	37	38	20	1	REC. – RM: 2111 – BLANKET WARMER		1.92	N
REC. – RM: 2121		0.72	R	20	1	39	40	20	1	REC. – RM: 2126 – REFRIGERATOR		1.20	N
REC. – CORRIDOR: 2100-2103		1.08	R	20	1	41	42	20	1	REC. – RM: 2126 – MICROWAVE		1.20	N

	SUMMARY BY LOAD TYPE	CONNECTED KVA				TOTAL KVA	NEC %	NEC TOTAL
		PH A	PH B	PH C	FEED			
L	LIGHTING				8.5	8.5	1.25	10.7
R	RECEPTACLES	8.6	7.0	9.4	9.2	34.2	10K+50%	22.1
M	MOTORS						1.00	
LM	LARGEST MOTOR						1.25	
C	CONTINUOUS						1.25	
N	NON-CONTINUOUS	7.8	10.2	7.1	8.2	33.3	1.00	33.3
S	SPARE				0.4	0.4	1.00	0.4
X	NON-COINCIDENT				2.9	2.9	0.00	
O	OTHER						1.00	
F	FEEDER	9.8	9.9	9.4				
TOTAL KVA (PHASE)		26.3	27.1	25.9		79.3		66.4
TOTAL AMPERES		219.0	225.8	215.5		220.1		184.4
PHASE BALANCE, ABC		A–B	B–C	C–A				
PERCENT		3.1%	4.7%	1.6%				

NOTES:

VOLTAGE: 208Y/120V, 3PH, 4W
BUS: 225
MAIN: LUGS ONLY – FED BY 225A CB

PANEL "2NLB – SECTION 2" SCHEDULE

LOCATION: "CORRIDOR 2002"

MIN. A.I.C. RATING: 10,000
ENCLOSURE: NEMA 1
MOUNTING: RECESSED

LOAD DESCRIPTION	NOTE	KVA	LOAD	AMP	P	CKT	CKT	AMP	P	LOAD DESCRIPTION	NOTE	KVA	LOAD
LTG – RM: 2602-2606		0.92	L	20	1	1	2	20	1	LTG – RM: 2013-2016		1.00	L
LTG – RM: 2557, 2650, 2654-2656		1.02	L	20	1	3	4	20	1	LTG – RM: 2017, 2018, 2640-2643		1.17	L
LTG – RM: 2651-2653, 2658, 2659		0.95	L	20	1	5	6	20	1	LTG – RM: LOBBY AREA		1.40	L
SPARE			S	20	1	7	8	20	1	LTG – RM: 2019		0.33	L
SPARE			S	20	1	9	10	20	1	SPARE			S
SPARE			S	20	1	11	12	20	1	LTG – RM: 2000		0.60	L
LTG – CORRIDOR 2300	2	0.54	L	20	1	13	14	20	1	SPARE			S
LTG – CORRIDOR 2602		0.61	L	20	1	15	16	20	1	SPARE			S
REC. – RM: 2117, 2020, 2126, 2127		1.08	R	20	1	17	18	20	1	SPARE			S
REC. – RM: 2020, 2127, 2130		1.08	R	20	1	19	20	20	1	REC. – CORRIDOR 2300, 2205		0.54	R
REC. – RM: 2128, 2130		1.08	R	20	1	21	22	20	1	WATER GOUNTAIN – 2205		1.92	N
REC. – RM: 2104, 2105, 2131		0.90	R	20	1	23	24	20	1	REC – 2401, 2206		0.72	R
REC. – OUTSIDE		0.72	R	20	1	25	26	20	1	REC – 2401		0.90	R
REC. – RM: 2122 – 2124		1.08	R	20	1	27	28	20	1	REC. OUTSIDE – EMT		0.36	S
REC. – RM: 2122, 2123		1.08	R	20	1	29	30	20	1	SPARE			S
REC. – RM: 2115, 2116 – EXAM BED	1	1.92	N	20	1	31	32	20	1	REC. – RM: 2126 – GARBAGE DIPOSER		0.92	N
REC. – RM: 2121, 2122 – EXAM BED	1	1.92	N	20	1	33	34	20	1	REC. – RM: 2126 – WATER HEATER		0.75	N
REC. – RM: 2123, 2124 – EXAM BED	1	1.92	X	20	1	35	36	20	1	REC. – RM: 2111 – WATER HEATER		0.75	N
REC. – RM: 2130 – EXAM BED	1	0.96	X	20	1	37	38		1	SPACE W/ HARDWARE			
SPARE			S	20	1	39	40		1	SPACE W/ HARDWARE			
SPARE			S	20	1	41	42		1	SPACE W/ HARDWARE			

	SUMMARY BY LOAD TYPE	CONNECTED KVA				TOTAL KVA	NEC %	NEC TOTAL
		PH A	PH B	PH C	FEED			
L	LIGHTING	2.8	2.8	3.0		8.5	1.25	10.7
R	RECEPTACLES	3.2	2.2	3.8		9.2	10K+50%	9.2
M	MOTORS						1.00	
LM	LARGEST MOTOR						1.25	
C	CONTINUOUS						1.25	
N	NON-CONTINUOUS	2.8	4.6	0.8		8.2	1.00	8.2
S	SPARE		0.4			0.4	1.00	0.4
X	NON-COINCIDENT	1.0		1.9		2.9	0.00	
O	OTHER						1.00	
F	FEEDER							
TOTAL KVA (PHASE)		9.8	9.9	9.4		29.1		28.4
TOTAL AMPERES		81.9	82.5	78.3		80.9		78.8
PHASE BALANCE, ABC		A–B	B–C	C–A				
PERCENT		0.8%	5.3%	4.4%				

NOTES:
1. ASSUMING 4 OUT OF 7 EXAM BEDS ARE BEING USED AT THE SAME TIME.

VOLTAGE: 480Y/277V, 3PH, 4W
BUS: 225
MAIN: LUGS ONLY – FED BY 225A CB

PANEL "1NHA" SCHEDULE

LOCATION: "BOILER ROOM 1604"

MIN. A.I.C. RATING: 14,000
ENCLOSURE: NEMA 1
MOUNTING: SURFACE

LOAD DESCRIPTION	NOTE	KVA	LOAD	AMP	P	CKT	CKT	AMP	P	LOAD DESCRIPTION	NOTE	KVA	LOAD
C-1	2	40.24	M	70	3	1	2	90	3	C-2	1	53.60	M
			–	–	–	3	4	–	–				–
			–	–	–	5	6	–	–				–
SNOW MELT – UNDER CANOPY	3,4	4.43	C	20	1	7	8		1	SPACE W/ HARDWARE			
SNOW MELT – UNDER CANOPY	3,4	4.43	C	20	1	9	10		1	SPACE W/ HARDWARE			
SNOW MELT – UNDER CANOPY	3,4	4.43	C	20	1	11	12		1	SPACE W/ HARDWARE			
SNOW MELT – UNDER CANOPY	3,4	4.43	C	20	1	13	14		1	SPACE W/ HARDWARE			
HEAT TRACE CONTACTOR 1HT-2		0.10	N	20	1	15	16		1	SPACE W/ HARDWARE			
SPACE W/ HARDWARE					1	17	18		1	SPACE W/ HARDWARE			
SPACE W/ HARDWARE					1	19	20		1	SPACE W/ HARDWARE			
SPACE W/ HARDWARE					1	21	22		1	SPACE W/ HARDWARE			
SPACE W/ HARDWARE					1	23	24		1	SPACE W/ HARDWARE			
SPACE W/ HARDWARE					1	25	26		1	SPACE W/ HARDWARE			
SPACE W/ HARDWARE					1	27	28		1	SPACE W/ HARDWARE			
SPACE W/ HARDWARE					1	29	30		1	SPACE W/ HARDWARE			

	SUMMARY BY LOAD TYPE	CONNECTED KVA				TOTAL KVA	NEC %	NEC TOTAL
		PH A	PH B	PH C	FEED			
L	LIGHTING						1.25	
R	RECEPTACLES						10K+50%	
M	MOTORS	31.3	31.3	31.3		93.8	1.00	93.8
LM	LARGEST MOTOR						1.25	
C	CONTINUOUS	8.9	4.4	4.4		17.7	1.25	22.2
N	NON-CONTINUOUS		0.1			0.1	1.00	0.1
S	SPARE						1.00	
X	NON-COINCIDENT						0.00	
O	OTHER						1.00	
F	FEEDER							
TOTAL KVA (PHASE)		40.1	35.8	35.7		111.7		116.1
TOTAL AMPERES		144.9	129.2	128.9		134.3		139.6
PHASE BALANCE, ABC		A–B	B–C	C–A				
PERCENT		11.6%	0.3%	11.9%				

NOTES:
1. FUTURE LOAD
2. 3#6, 1#8 GND, 1"C
3. CONNECT THROUGH HEAT TRACE CONTACTOR "1HT-2"
4. PROVIDE 30mA GROUND FAULT PROTECTION CIRCUIT BREAKER

VOLTAGE: 208Y/120V, 3PH, 4W
BUS: 225
MAIN: 100A CB

PANEL "1NC" SCHEDULE

LOCATION: "BOILER ROOM 1604"

MIN. A.I.C. RATING: 10,000
ENCLOSURE: NEMA 1
MOUNTING: SURFACE

LOAD DESCRIPTION	NOTE	KVA	LOAD	AMP	P	CKT	CKT	AMP	P	LOAD DESCRIPTION	NOTE	KVA	LOAD
LIGHTS	1,2	1.10	L	20	1	1	2	20	1	LIGHTS	1,2	0.50	L
LEVEL VALVE	2,3	1.92	M	20	1	3	4	20	1	LIGHTS	1,2	0.50	L
AIR CURTAIN	2,3	1.92	M	20	1	5	6	20	1	LIGHTS	1,2	0.80	L
UNKNOWN	2,3	1.92	N	20	1	7	8	20	1	LIGHTS	1,2	0.70	L
SPARE			S	20	1	9	10	20	1	RECEPTACLES	2,3	1.08	R
SPARE			S	20	1	11	12	20	1	RECEPTACLES	2,3	1.50	L
SPARE			S	20	1	13	14	20	1	RECEPTACLES	2,3	1.50	L
SHOP WIREMOLD	1,2	0.60	N	20	1	15	16	20	1	SPARE			
SPARE			S	20	1	17	18	20	1	SPARE			
SPARE			S	20	1	19	20	20	1	UNIT HEATER	2,3	1.00	N
SPARE			S	20	1	21	22	20	1	SPARE			
SPARE			S	20	1	23	24	20	1	UNKNOWN	2,3	1.92	N
SPARE			S	20	1	25	26	20	1	UNKNOWN	2,3	1.92	N
RECEPTACLES	1,2	0.60	R	20	1	27	28	50	3	SHREDDER	3	8.72	M
RECEPTACLES	1,2	0.80	R	20	1	29	30	–	–				–
RECEPTACLES	1,2	0.60	R	20	1	31	32	–	–				–
BOILER ROOM	1,2	0.80	M	20	1	33	34	20	1	SPACE W/ HARDWARE			
BOILER ROOM	1,2	0.80	M	20	1	35	36	20	1	SPACE W/ HARDWARE			
02 RECEPTACLE, 02 ALARM	2,3	0.50	N	20	1	37	38	20	1	SPACE W/ HARDWARE			
OUTSIDE RECEPTACLES	2,3	0.54	R	20	1	39	40	40	1	SPARE			
SPARE	2		S	20	1	41	42	40	1	SPARE			

	SUMMARY BY LOAD TYPE	CONNECTED KVA				TOTAL KVA	NEC %	NEC TOTAL
		PH A	PH B	PH C	FEED			
L	LIGHTING	3.8	0.5	2.3		6.6	1.25	8.3
R	RECEPTACLES	0.6	2.2	0.8		3.6	10K+50%	3.6
M	MOTORS	2.9	5.6	5.6		14.2	1.00	14.2
LM	LARGEST MOTOR						1.25	
C	CONTINUOUS						1.25	
N	NON-CONTINUOUS	5.3	0.6	1.9		7.9	1.00	7.9
S	SPARE						1.00	
X	NON-COINCIDENT						0.00	
O	OTHER						1.00	
F	FEEDER							
TOTAL KVA (PHASE)		12.6	8.9	10.6		32.2		33.9
TOTAL AMPERES		105.3	74.5	88.7		89.5		94.1
PHASE BALANCE, ABC		A–B	B–C	C–A				
PERCENT		34.4%	15.8%	18.6%				

NOTES:
1. LOADS TAKEN FROM 1985 RECORD DRAWING E9.
2. EXISTING LOAD
3. ESTIMATED LOAD

VOLTAGE: 208Y/120V, 3PH, 4W
BUS: 225
MAIN: 200A CB

PANEL "2NC" SCHEDULE

LOCATION: "TECH WORK – 2620"

MIN. A.I.C. RATING: 10,000
ENCLOSURE: NEMA 1
MOUNTING: RECESSED

LOAD DESCRIPTION	NOTE	KVA	LOAD	AMP	P	CKT	CKT	AMP	P	LOAD DESCRIPTION	NOTE	KVA	LOAD
REC. (NUCLEAR MED)	1,2	0.50	R	20	1	1	2	20	1	LTG	1,2	1.06	L
REC. (NUCLEAR MED)	1,2	0.50	R	20	1	3	4	20	1	LTG	1,2	0.82	L
REC. (NUCLEAR MED)	1,2	0.50	R	20	1	5	6	20	1	LTG	1,2	0.70	L
REC. (HOT LAB)	1,2	0.40	R	20	1	7	8	20	1	UNKNOWN	1,3	1.92	N
REC. (HOT LAB)	1,2	0.80	R	20	1	9	10	20	1	UNKNOWN	1,3	1.92	N
REC. (HOT LAB)	1,2	0.80	R	20	1	11	12	20	1	UNKNOWN	1,3	1.92	N
REC. (HOT LAB)	1,2	0.50	R	20	1	13	14	20	1	REC.	1,2	0.80	R
REC. (HOT LAB)	1,2	0.50	R	20	1	15	16	20	1	F.I.	1,2	0.48	N
ULTRASOUND	1,3	1.92	N	20	1	17	18	30	2	MAMM	1,2	4.99	N
ULTRASOUND	1,3	1.92	N	20	1	19	20	–	–				–
UNKNOWN	1,3	1.92	N	20	1	21	22	20	1	EF-8 – ABOVE RM: 2604	4	0.51	M
ULTRASOUND	1,3	1.92	N	20	1	23	24	20	1	SPARE	5		S
BONE DENSITOMETRY UNIT	1,3	1.92	N	20	1	25	26	20	1	SPARE	5		S
LTG. – RM: 2620, 2627, 2634, 2635, 2638	4	1.52	L	20	1	27	28	20	1	SPARE	5		S
LTG. – RM: 2631, 2632, 2633, 2636	4	1.41	L	20	1	29	30		1	SPACE W/ HARDWARE			
REC. – RM: 2631, 2634, 2635	4	1.08	R	20	1	31	32		1	SPACE W/ HARDWARE			
REC. – RM: 2633, 2635, 2636, 2637	4	1.08	R	20	1	33	34		1	SPACE W/ HARDWARE			
REC. – RM: 2634, 2637, 2638	4	0.90	R	20	1	35	36		1	SPACE W/ HARDWARE			
VIEW BOXES – RM: 2634, 2638	4	0.20	N	20	1	37	38		1	SPACE W/ HARDWARE			
REC. – RM: 2638 – DEDICATED	4	1.92	N	20	1	39	40		1	SPACE W/ HARDWARE			
REC. – CORRIDOR 2602	4	0.72	R	20	1	41	42		1	SPACE W/ HARDWARE			

	SUMMARY BY LOAD TYPE	CONNECTED KVA				TOTAL KVA	NEC %	NEC TOTAL
		PH A	PH B	PH C	FEED			
L	LIGHTING	1.1	2.3	2.1		5.5	1.25	6.9
R	RECEPTACLES	3.3	2.9	2.9		9.1	10K+50%	9.1
M	MOTORS		0.5			0.5	1.00	0.5
LM	LARGEST MOTOR						1.25	
C	CONTINUOUS						1.25	
N	NON-CONTINUOUS	8.5	6.2	8.3		23.0	1.00	23.0
S	SPARE						1.00	
X	NON-COINCIDENT						0.00	
O	OTHER						1.00	
F	FEEDER							
TOTAL KVA (PHASE)		12.8	12.0	13.3		38.0		39.4
TOTAL AMPERES		106.6	99.6	110.6		105.6		109.4
PHASE BALANCE, ABC		A–B	B–C	C–A				
PERCENT		6.5%	10.4%	3.9%				

NOTES:
1. EXISTING LOAD
2. LOADS TAKEN FROM 1985 RECORD DRAWING E9
3. UNKNOWN LOAD. ASSUMING BREAKER LOADED TO 80% CAPACITY
4. NEW LOAD
5. NEW SPARE BREAKER

PDC INC. ENGINEERS
1231 Gambell St., Anchorage, Alaska 99501

R1M
ARCHITECTS

SOUTH PENINSULA HOSPITAL
EAST ADDITION & ALTERATIONS – PHASE 1
HOMER, ALASKA

PANEL SCHEDULES (1 OF 2)

Revisions

Date	03/08/06
Drawn	ML
Checked	PF/RP
Job No.	03117

E9.1

PANEL "1LLA" SCHEDULE

VOLTAGE: 208Y/120V, 3PH, 4W
BUS: 125
MAIN: 60A CB
LOCATION: "ELECTRICAL ROOM"
MIN. A.I.C. RATING: 10,000
ENCLOSURE: NEMA 1
MOUNTING: SURFACE

LOAD DESCRIPTION	NOTE	KVA	LOAD	AMP	P	CKT	CKT	AMP	P	LOAD DESCRIPTION	NOTE	KVA	LOAD
LTG - RM: 1003, 1200, 1201		0.42	L	20	1	1	2	20	1	SPARE			S
SPARE			S	20	1	3	4	20	1	SPARE			S
SPARE			S	20	1	5	6	20	1	DEDICATED OUTLET - COMM ROOM 1011		1.92	C
LTG - MAT MANAGEMENT		0.40	L	20	1	7	8	20	1	SPRINKLER BELL FIRST FLOOR		0.50	C
LIGHTING CONTACTOR 1LC-1		0.25	C	20	1	9	10	20	1	SPARE			S
OUTSIDE LTGS, 2602, 2603	1	0.30	L	20	2	11	12	20	1	SPARE			S
SPARE			-	-	-	13	14		1	SPACE W/ HARDWARE			
OUTSIDE LTGS - CANOPY, EMT, LOADING	1	0.58	L	20	1	15	16		1	SPACE W/ HARDWARE			
SMOKE FIRE DAMPERS	1	0.60	M	20	1	17	18		1	SPACE W/ HARDWARE			
SPARE			S	20	1	19	20		1	SPACE W/ HARDWARE			
SPACE W/ HARDWARE					1	21	22		1	SPACE W/ HARDWARE			
SPACE W/ HARDWARE					1	23	24		1	SPACE W/ HARDWARE			
SPACE W/ HARDWARE					1	25	26		1	SPACE W/ HARDWARE			
SPACE W/ HARDWARE					1	27	28		1	SPACE W/ HARDWARE			
SPACE W/ HARDWARE					1	29	30		1	SPACE W/ HARDWARE			

	SUMMARY BY LOAD TYPE	CONNECTED KVA PH A	PH B	PH C	FEED	TOTAL KVA	NEC %	NEC TOTAL
L	LIGHTING	1.0	0.6	0.2		1.7	1.25	2.1
R	RECEPTACLES						10K+50%	
M	MOTORS			0.6		0.6	1.00	0.6
LM	LARGEST MOTOR						1.25	
C	CONTINUOUS	0.5	0.3	1.9		2.7	1.25	3.3
N	NON-CONTINUOUS						1.00	
S	SPARE						1.00	
X	NON-COINCIDENT						0.00	
O	OTHER						1.00	
F	FEEDER							
TOTAL KVA (PHASE)		1.5	0.8	2.7		5.0		6.1
TOTAL AMPERES		12.2	6.9	22.2		13.8		16.8
PHASE BALANCE, ABC		A-B	B-C	C-A				
PERCENT		38.6%	111.1%	72.4%				

NOTES:
1. CONNECT THROUGH LIGHTING CONTACTOR "1LC-1"

PANEL "2LLB" SCHEDULE

VOLTAGE: 208Y/120V, 3PH, 4W
BUS: 125
MAIN: LUGS ONLY - FED BY 50A CB
LOCATION: "CORRIDOR 2002"
MIN. A.I.C. RATING: 10,000
ENCLOSURE: NEMA 1
MOUNTING: RECESSED

LOAD DESCRIPTION	NOTE	KVA	LOAD	AMP	P	CKT	CKT	AMP	P	LOAD DESCRIPTION	NOTE	KVA	LOAD
SPARE OXYGEN MONITOR PANEL			S	20	1	1	2	20	1	~~FIRE ALARM PANEL ANNUNCIATOR~~ SPARE		0.50	C
SPARE			S	20	1	3	4	20	1	LTG - RM: 2602-2605		0.69	L
SPARE			S	20	1	5	6	20	1	LTG - RM: 2001, 2000, 2205, 2003, 2017		1.07	L
LTG - RM: 2100, 2101, 2019		0.52	L	20	1	7	8	20	1	DOOR OPERATORS		0.75	N
LTG - RM: 2103-2105, 2131		0.61	L	20	1	9	10	20	1	SPARE			S
LTG - RM: 2650, 2652, 2654		0.53	L	20	1	11	12	20	1	SPARE			S
~~SPRINKLER BELL - SECOND FLOOR~~		0.50	C	20	1	13	14	20	1	SPARE			S
SPARE			S	20	1	15	16	20	1	SPARE			S
SPACE W/ HARDWARE					1	17	18		1	SPACE W/ HARDWARE			
SPACE W/ HARDWARE					1	19	20		1	SPACE W/ HARDWARE			
SPACE W/ HARDWARE					1	21	22		1	SPACE W/ HARDWARE			
SPACE W/ HARDWARE					1	23	24		1	SPACE W/ HARDWARE			
SPACE W/ HARDWARE					1	25	26		1	SPACE W/ HARDWARE			
SPACE W/ HARDWARE					1	27	28		1	SPACE W/ HARDWARE			
SPACE W/ HARDWARE					1	29	30		1	SPACE W/ HARDWARE			

	SUMMARY BY LOAD TYPE	CONNECTED KVA PH A	PH B	PH C	FEED	TOTAL KVA	NEC %	NEC TOTAL
L	LIGHTING	0.5	1.3	1.6		3.4	1.25	4.3
R	RECEPTACLES						10K+50%	
M	MOTORS						1.00	
LM	LARGEST MOTOR						1.25	
C	CONTINUOUS	1.0				1.0	1.25	1.3
N	NON-CONTINUOUS	0.8				0.8	1.00	0.8
S	SPARE						1.00	
X	NON-COINCIDENT						0.00	
O	OTHER						1.00	
F	FEEDER							
TOTAL KVA (PHASE)		2.3	1.3	1.6		5.2		6.3
TOTAL AMPERES		18.9	10.8	13.3		14.4		17.4
PHASE BALANCE, ABC		A-B	B-C	C-A				
PERCENT		56.3%	17.4%	38.9%				

NOTES:

PANEL "1CLDP" SCHEDULE

VOLTAGE: 208Y/120V, 3PH, 4W
BUS: 400
MAIN: 400A CB
LOCATION: "ELECTRICAL ROOM"
MIN. A.I.C. RATING: 10,000
ENCLOSURE: NEMA 1
MOUNTING: SURFACE

LOAD DESCRIPTION	NOTE	KVA	LOAD	AMP	P	CKT	CKT	AMP	P	LOAD DESCRIPTION	NOTE	KVA	LOAD
~~PANEL 2CLA~~ SPACE		22.82	F	125	3	1	2	30	3	~~WALK IN FREEZER~~ SPACE	1	6.30	M
			-	-	-	3	4	-	-				-
			-	-	-	5	6	-	-				-
~~PANEL 2CLB~~ SPACE		27.88	F	125	3	7	8	125	~~3~~	~~SPARE~~ SPACE			S
			-	-	-	9	10	-	-				-
			-	-	-	11	12	-	-				-
~~(E) PANEL 1CC~~ FREEZER 40A		31.05	F	~~150~~	2	13	14		3	~~SPACE W/ HARDWARE~~ SPACE			
			-	-	-	15	16	-	-				-
			-	-	-	17	18	-	-				-
~~SPACE W/ HARDWARE~~ 1CC				150	3	19	20	125	3	~~SPACE W/ HARDWARE~~ 2CLB			
			-	-	-	21	22	-	-				-
			-	-	-	23	24	-	-				-
~~SPACE W/ HARDWARE~~ SPARE					3	25	26	125	3	SPACE W/ HARDWARE 2CLA			
			-	-	-	27	28	-	-				-
			-	-	-	29	30	-	-				-

	SUMMARY BY LOAD TYPE	CONNECTED KVA PH A	PH B	PH C	FEED	TOTAL KVA	NEC %	NEC TOTAL
L	LIGHTING				16.3	16.3	1.25	20.3
R	RECEPTACLES				21.1	21.1	10K+50%	15.5
M	MOTORS	2.1	2.1	2.1	17.1	23.4	1.00	23.4
LM	LARGEST MOTOR						1.25	
C	CONTINUOUS				9.2	9.2	1.25	11.4
N	NON-CONTINUOUS				18.1	18.1	1.00	18.1
S	SPARE						1.00	
X	NON-COINCIDENT						0.00	
O	OTHER						1.00	
F	FEEDER	30.7	26.6	24.4				
TOTAL KVA (PHASE)		32.8	28.7	26.5		88.0		88.9
TOTAL AMPERES		273.1	239.2	220.9		244.4		246.7
PHASE BALANCE, ABC		A-B	B-C	C-A				
PERCENT		13.9%	7.5%	21.4%				

NOTES:
1. SINGLE POINT CONNECTION FOR FREEZER CIRCUIT. COORDINATE CONDUIT ROUTING WITH EQUIPMENT MANUFACTURER.

PANEL "1CC" SCHEDULE

VOLTAGE: 208Y/120V, 3PH, 4W
BUS: 225
MAIN: 150A CB
LOCATION: "BOILER ROOM 1604"
MIN. A.I.C. RATING: 10,000
ENCLOSURE: NEMA 1
MOUNTING: SURFACE

LOAD DESCRIPTION	NOTE	KVA	LOAD	AMP	P	CKT	CKT	AMP	P	LOAD DESCRIPTION	NOTE	KVA	LOAD
LIGHTS	1,2	0.70	L	20	1	1	2	20	1	ROOF DRAIN	1,2	1.43	C
LIGHTS	1,2	1.00	L	20	1	3	4	20	1	ROOF DRAIN	1,2	1.56	C
LIGHTS	1,2	0.50	L	20	1	5	6	20	1	HEAT TRACE	1,2	0.26	C
LIGHTS	2,3	1.92	L	20	1	7	8	20	1	ICE DETECTOR	1,2	0.15	C
SPARE			S	20	1	9	10	15	1	SPARE			S
SPARE			S	20	1	11	12	15	1	FAN	1,2	0.30	M
SIGN	1,2	1.00	L	20	1	13	14	20	1	CHEM PUMP	1,2	0.67	M
SIGN	1,2	1.00	L	20	1	15	16	20	1	CHEM PUMP	1,2	0.67	M
DAY TANK ~~PUMPS~~	1,2	0.50	M	20	1	17	18	20	1	CHEM PUMP	1,2	0.67	M
P-3 - RM: 1605	4	1.13	M	20	1	19	20	20	1	WEB CONTROL	2,3	1.00	C
P-4, HWG-1 - RM: 1605	4	1.13	M	20	1	21	22	20	1	OIL PUMP	2,3	1.92	M
CRU-1 - PUMP #1 - RM: 1605	4	1.13	M	20	1	23	24	20	1	HEAT TRACE	4,5,6	1.00	C
CRU-1 - PUMP #2- RM: 1605	4	1.13	M	20	1	25	26	20	1	HEAT TRACE	4,5,6	1.00	C
ALARM FOR T-2	4	0.50	C	20	1	27	28	20	1	HEAT TRACE	4,5,6	1.00	C
UH-2 - RM:1605	4	0.69	M	20	1	29	30	20	1	HEAT TRACE	4,5,6	1.00	C
FREEZER - RM 1210	4	1.92	N	20	1	31	32	20	1	HEAT TRACE CONTACTOR 1HT-1	4	0.10	N
UH-1: RM 1504, 1210	4	0.41	M	20	1	33	34		1	SPACE W/ HARDWARE			
CUH-2, CUH-1, UH-1: RM 1003, 1004, 1001	4	1.00	M	20	1	35	36		1	SPACE W/ HARDWARE			
EF-13, CUH-2, CUH-1: RM 1001, 1701, 1705	4	1.54	M	20	1	37	38		1	SPACE W/ HARDWARE			
EF-1: RM 1708	4	1.13	M	20	1	39	40		1	SPACE W/ HARDWARE			
SPACE W/ HARDWARE					1	41	42		1	SPACE W/ HARDWARE			

	SUMMARY BY LOAD TYPE	CONNECTED KVA PH A	PH B	PH C	FEED	TOTAL KVA	NEC %	NEC TOTAL
L	LIGHTING	3.6	2.0	0.5		6.1	1.25	7.7
R	RECEPTACLES						10K+50%	
M	MOTORS	4.5	5.3	4.3		14.0	1.00	14.0
LM	LARGEST MOTOR						1.25	
C	CONTINUOUS	3.6	3.1	2.3		8.9	1.25	11.1
N	NON-CONTINUOUS	2.0				2.0	1.00	2.0
S	SPARE						1.00	
X	NON-COINCIDENT						0.00	
O	OTHER						1.00	
F	FEEDER							
TOTAL KVA (PHASE)		13.7	10.3	7.0		31.0		34.8
TOTAL AMPERES		114.0	85.9	58.7		86.2		96.6
PHASE BALANCE, ABC		A-B	B-C	C-A				
PERCENT		32.6%	31.6%	64.1%				

NOTES:
1. LOAD TAKEN FROM 1985 RECORD DRAWING E9.
2. EXISTING LOAD
3. ESTIMATED LOAD
4. NEW LOAD
5. CONNECT THROUGH HEAT TRACE CONTACTOR "1HT-1"
6. PROVIDE 30mA GROUND FAULT PORTECTION CIRCUIT BREAKER

PANEL "2CLA" SCHEDULE

VOLTAGE: 208Y/120V, 3PH, 4W
BUS: 125
MAIN: LUGS ONLY - FED BY 125A CB
LOCATION: "PASSAGE 2104"
MIN. A.I.C. RATING: 10,000
ENCLOSURE: NEMA 1
MOUNTING: SURFACE

LOAD DESCRIPTION	NOTE	KVA	LOAD	AMP	P	CKT	CKT	AMP	P	LOAD DESCRIPTION	NOTE	KVA	LOAD
HILL ROM POWER COLUMN #1 - RM: 2129		0.80	N	20	1	1	2	20	1	LTG - TRAUMA 2129		1.20	L
HILL ROM POWER COLUMN #1 - RM: 2129		0.40	N	20	1	3	4	20	1	LTG - TRAUMA 2129		1.20	L
HILL ROM POWER COLUMN #1 - RM: 2129		0.80	N	20	1	5	6	20	1	LTG - TRAUMA 2129		0.47	L
HILL ROM POWER COLUMN #1 - RM: 2129		0.80	N	20	1	7	8	20	1	LTG - RM: 2106, 2131, 2105		1.15	L
HILL ROM POWER COLUMN #1 - RM: 2129		0.80	N	20	1	9	10	20	1	LTG - RM: 2123, 2124		0.92	L
HILL ROM POWER COLUMN #1 - RM: 2129		0.80	N	20	1	11	12	20	1	LTG - RM: 2121, 2122		0.92	L
HILL ROM POWER COLUMN #1 - RM: 2129		0.80	N	20	1	13	14	20	1	LTG - RM: 2115, 2116		0.92	L
HILL ROM POWER COLUMN #1 - RM: 2129		0.40	N	20	1	15	16	20	1	LTG - TRAUMA 2129		0.50	L
HILL ROM POWER COLUMN #1 - RM: 2129		0.40	N	20	1	17	18	20	1	LTG - RM: 2130		0.42	L
HILL ROM POWER COLUMN #2 - RM: 2129		0.80	N	20	1	19	20	20	1	02 CONTROLS		0.50	N
HILL ROM POWER COLUMN #2 - RM: 2129		0.40	N	20	1	21	22	20	1	SPARE			S
HILL ROM POWER COLUMN #2 - RM: 2129		0.80	N	20	1	23	24	20	1	REC - TRAUMA 2129		0.54	R
HILL ROM POWER COLUMN #2 - RM: 2129		0.80	N	20	1	25	26	20	1	REC - TRAUMA 2129		0.54	R
HILL ROM POWER COLUMN #2 - RM: 2129		0.80	N	20	1	27	28	20	1	REC - TRAUMA 2129		0.54	R
HILL ROM POWER COLUMN #2 - RM: 2129		0.80	N	20	1	29	30	20	1	REC - TRAUMA 2129 - BLANKET WARMER		0.50	N
HILL ROM POWER COLUMN #2 - RM: 2129		0.80	N	20	1	31	32	20	1	VIEW BOXES - TRAUMA 2129		0.50	L
HILL ROM POWER COLUMN #2 - RM: 2129		0.40	N	20	1	33	34	20	1	SPARE			
HILL ROM POWER COLUMN #2 - RM: 2129		0.40	N	20	1	35	36	20	1	SPARE			
SPARE			S	20	1	37	38		1	SPACE W/ HARDWARE			
SPARE			S	20	1	39	40		1	SPACE W/ HARDWARE			
SPARE			S	20	1	41	42		1	SPACE W/ HARDWARE			

	SUMMARY BY LOAD TYPE	CONNECTED KVA PH A	PH B	PH C	FEED	TOTAL KVA	NEC %	NEC TOTAL
L	LIGHTING	3.8	2.6	1.8		8.2	1.25	10.3
R	RECEPTACLES	0.5	0.5	0.5		1.6	10K+50%	1.6
M	MOTORS						1.00	
LM	LARGEST MOTOR						1.25	
C	CONTINUOUS						1.25	
N	NON-CONTINUOUS	5.3	3.2	4.5		13.0	1.00	13.0
S	SPARE						1.00	
X	NON-COINCIDENT						0.00	
O	OTHER						1.00	
F	FEEDER							
TOTAL KVA (PHASE)		9.6	6.4	6.9		22.8		24.9
TOTAL AMPERES		80.0	53.0	57.0		63.3		69.0
PHASE BALANCE, ABC		A-B	B-C	C-A				
PERCENT		42.7%	6.4%	36.3%				

NOTES:

PANEL "2CLB" SCHEDULE

VOLTAGE: 208Y/120V, 3PH, 4W
BUS: 125
MAIN: LUGS ONLY - FED BY 125A CB
LOCATION: "CORRIDOR 2301"
MIN. A.I.C. RATING: 10,000
ENCLOSURE: NEMA 1
MOUNTING: RECESSED

LOAD DESCRIPTION	NOTE	KVA	LOAD	AMP	P	CKT	CKT	AMP	P	LOAD DESCRIPTION	NOTE	KVA	LOAD
SPARE			S	20	1	1	2	20	1	REC. - RM: 2013-2015		0.72	R
SPARE			S	20	1	3	4	20	1	J BOX - RM: 2014		1.92	N
LTG - RM: 2632, 2627, 2620, 2634, 2637		0.60	L	20	1	5	6	20	1	REC. - RM: 2017, 2018, 2643		0.72	R
SPARE			S	20	1	7	8	20	1	REC. - RM: 2015, 2016		1.08	R
REC - TELECOM ROOM - 1ST FLOOR		1.92	R	20	1	9	10	20	1	REC. - RM: 2021, 2022		1.08	R
REC - TELECOM ROOM - 1ST FLOOR		1.92	R	20	1	11	12	20	1	REC. - RM: 2023, 2024		1.08	R
REC - TELECOM ROOM - 1ST FLOOR		1.92	R	20	1	13	14	20	1	VIEW BOXES - RM: 2115, 2116, 2121		0.60	N
REC - TELECOM ROOM - 1ST FLOOR		1.92	R	20	1	15	16	20	1	VIEW BOXES - RM: 2122-2124		0.60	N
REC. - RM: 2130, 2134		0.72	R	20	1	17	18	20	1	REC. - RM: 2125 - NURSE STATION		0.90	R
REC. - RM: 2132 - DEDICATED		1.92	R	20	1	19	20	20	1	REC. - RM: 2125 - NURSE STATION		0.72	R
SPARE			S	20	1	21	22	20	1	REC. - RM: 2020, 2130		0.90	R
SPARE			S	20	1	23	24	20	1	REC. - RM: 2020 - DEDICATED, CAMERA		1.92	R
SPARE			S	20	1	25	26	20	1	~~SPACE W/ HARDWARE~~ R05			
~~02/N02 MONITOR~~ SPARE		0.25	C	20	1	27	28	30	2	~~SPACE W/ HARDWARE~~ R08			
SPARE			S	20	1	29	30	20	2	~~SPACE W/ HARDWARE~~ EF8			
SPARE			S	20	1	31	32	20	~~1~~	~~SPACE W/ HARDWARE~~ R07			
SPARE			S	20	1	33	34	20	1	SPACE W/ HARDWARE HEATING CONTROL			
SPARE			S	20	1	35	36		1	SPACE W/ HARDWARE			
CUH-1, CUH-1 - CORRIDOR: 2602, 2603		0.44	M	20	1	37	38		1	SPACE W/ HARDWARE			
CUH-1, CUH-1, CUH -1 - RM: 2000, 2132		1.36	M	20	1	39	40		1	SPACE W/ HARDWARE			
EF-7, EF-11 - ROOF ABOVE RM: 2117, 2132		1.33	M	20	1	41	42	20	1	LTG - RM: 1504, 1213, 1210, 1605?		1.34	L

	SUMMARY BY LOAD TYPE	CONNECTED KVA PH A	PH B	PH C	FEED	TOTAL KVA	NEC %	NEC TOTAL
L	LIGHTING			1.9		1.9	1.25	2.4
R	RECEPTACLES	6.4	5.8	7.3		19.4	10K+50%	14.7
M	MOTORS	0.4	1.4	1.3		3.1	1.00	3.1
LM	LARGEST MOTOR						1.25	
C	CONTINUOUS		0.3			0.3	1.25	0.3
N	NON-CONTINUOUS	0.6	2.5			3.1	1.00	3.1
S	SPARE						1.00	
X	NON-COINCIDENT						0.00	
O	OTHER						1.00	
F	FEEDER							
TOTAL KVA (PHASE)		7.4	10.0	10.5		27.9		23.7
TOTAL AMPERES		61.6	82.9	87.7		77.4		65.8
PHASE BALANCE, ABC		A-B	B-C	C-A				
PERCENT		27.4%	6.2%	33.7%				

NOTES:

PANEL "1EHA - SECTION 1" SCHEDULE

VOLTAGE: 480Y/277V, 3PH, 4W
BUS: 400
MAIN: 400A CB W/ FEED-THRU LUGS TO PNL "1EHA"
LOCATION: "BOILER ROOM 1604"
MIN. A.I.C. RATING: 14,000
ENCLOSURE: NEMA 1
MOUNTING: SURFACE

LOAD DESCRIPTION	NOTE	KVA	LOAD	AMP	P	CKT	CKT	AMP	P	LOAD DESCRIPTION	NOTE	KVA	LOAD
B-1		15.00	M	30	3	1	2	15	3	P-1A		2.83	M
			-	-	-	3	4	-	-				-
			-	-	-	5	6	-	-				-
B-2		15.00	M	30	3	7	8	15	3	P-1B		2.83	X
			-	-	-	9	10	-	-				-
			-	-	-	11	12	-	-				-
B-3	1	15.00	M	30	3	13	14	15	3	P-2A		6.31	M
			-	-	-	15	16	-	-				-
			-	-	-	17	18	-	-				-
OXYGEN GENERATOR	3	26.90	M	50	3	19	20	15	3	P-2B		6.31	X
			-	-	-	21	22	-	-				-
			-	-	-	23	24	-	-				-
~~SPACE W/ HARDWARE~~ ELEVATOR 2				90	3	25	26	15	3	P-5A		4.00	M
~~SPACE W/ HARDWARE~~					~~1~~	27	28	-	-				-
~~SPACE W/ HARDWARE~~					~~1~~	29	30	-	-				-
~~SPACE W/ HARDWARE~~ EF10				15	3	31	32	15	3	P-5B		4.00	M
~~SPACE W/ HARDWARE~~					~~1~~	33	34	-	-				-
~~SPACE W/ HARDWARE~~					~~1~~	35	36	-	-				-
SPACE W/ HARDWARE					1	37	38	15	3	P-5C		4.00	X
SPACE W/ HARDWARE					1	39	40	-	-				-
SPACE W/ HARDWARE					1	41	42	-	-				-

	SUMMARY BY LOAD TYPE	CONNECTED KVA PH A	PH B	PH C	FEED	TOTAL KVA	NEC %	NEC TOTAL
L	LIGHTING						1.25	
R	RECEPTACLES						10K+50%	
M	MOTORS	29.7	29.7	29.7	171.6	260.6	1.00	260.6
LM	LARGEST MOTOR				54.9	54.9	1.25	68.6
C	CONTINUOUS						1.25	
N	NON-CONTINUOUS						1.00	
S	SPARE						1.00	
X	NON-COINCIDENT	4.4	4.4	4.4	6.2	19.3	0.00	
O	OTHER						1.00	
F	FEEDER	77.6	77.6	77.6				
TOTAL KVA (PHASE)		111.6	111.6	111.6		334.8		329.3
TOTAL AMPERES		402.7	402.7	402.7		402.7		396.0
PHASE BALANCE, ABC		A-B	B-C	C-A				
PERCENT		0.0%	0.0%	0.0%				

NOTES:
1. FUTURE LOAD
2. 3#10, 1#10 GND, 3/4" C.
3. 3#6, 1#8 GND, 1" C

PANEL "1EHA - SECTION 2" SCHEDULE

VOLTAGE: 480Y/277V, 3PH, 4W
BUS: 400
MAIN: LUGS ONLY - FED BY 400A CB
LOCATION: "BOILER ROOM 1604"
MIN. A.I.C. RATING: 14,000
ENCLOSURE: NEMA 1
MOUNTING: SURFACE

LOAD DESCRIPTION	NOTE	KVA	LOAD	AMP	P	CKT	CKT	AMP	P	LOAD DESCRIPTION	NOTE	KVA	LOAD
CU-1-E - EXISTING COND. PUMP		2.16	M	20	3	1	2	20	3	HWC-1-E - EXISTING HOT WATER CIRC.		11.64	M
			-	-	-	3	4	-	-				-
			-	-	-	5	6	-	-				-
CU-2-E - EXISTING COND. PUMP		2.16	X	20	3	7	8	20	3	HWC-2-E - EXISTING HOT WATER CIRC.			X
			-	-	-	9	10	-	-				-
			-	-	-	11	12	-	-				-
AHU-1	2	41.60	M	60	3	13	14	90	3	ELEVATOR 1	1,3	51.52	M
			-	-	-	15	16	-	-				-
			-	-	-	17	18	-	-				-
AHU-2	1,3	54.90	LM	90	3	19	20	~~90~~ 20	3	~~ELEVATOR 2~~ CIRC PUMP A	1,3	51.52	M
			-	-	-	21	22	-	-				-
			-	-	-	23	24	-	-				-
AHU-3		9.15	M	15	3	25	26	20	1	~~SPACE W/ HARDWARE~~ CIRC PUMP B			
			-	-	-	27	28		1	~~SPACE W/ HARDWARE~~			
			-	-	-	29	30		1	~~SPACE W/ HARDWARE~~			
FP-1A RFI	157	4.00	M	~~15~~ 30	3	31	32	15	1	~~SPACE W/ HARDWARE~~ EF7			
			-	-	-	33	34		1	~~SPACE W/ HARDWARE~~			
			-	-	-	35	36		~~1~~	~~SPACE W/ HARDWARE~~			
~~FP-1B~~ SPARE		4.00	X	15	3	37	38	40	3	~~SPACE W/ HARDWARE~~ SF4			
			-	-	-	39	40		~~1~~	~~SPACE W/ HARDWARE~~			
			-	-	-	41	42		~~1~~	~~SPACE W/ HARDWARE~~			

	SUMMARY BY LOAD TYPE	CONNECTED KVA PH A	PH B	PH C	FEED	TOTAL KVA	NEC %	NEC TOTAL
L	LIGHTING						1.25	
R	RECEPTACLES						10K+50%	
M	MOTORS	57.2	57.2	57.2		171.6	1.00	171.6
LM	LARGEST MOTOR	18.3	18.3	18.3		54.9	1.25	68.6
C	CONTINUOUS						1.25	
N	NON-CONTINUOUS						1.00	
S	SPARE						1.00	
X	NON-COINCIDENT	2.1	2.1	2.1		6.2	0.00	
O	OTHER						1.00	
F	FEEDER							
TOTAL KVA (PHASE)		77.6	77.6	77.6		232.7		240.2
TOTAL AMPERES		279.8	279.8	279.8		279.8		288.9
PHASE BALANCE, ABC		A-B	B-C	C-A				
PERCENT		0.0%	0.0%	0.0%				

NOTES:
1. FUTURE LOAD
2. 3#4, 1#6 GND, 1" C.
3. 3#2, 1#3 GND, 1-1/2" C.
4. MAIN BUSS RATING SHALL HAVE MINIMUM 50K AIC RAITING

△1

PDC INC. ENGINEERS
1231 Gambell St., Anchorage, Alaska 99501

R1M
ARCHITECTS

SOUTH PENINSULA HOSPITAL
EAST ADDITION & ALTERATIONS - PHASE 1
HOMER, ALASKA

PANEL SCHEDULES (2 OF 2)

Revisions
△1 ADD. No.1, 04/21/06

Date	03/08/06
Drawn	ML
Checked	PF/RP
Job No.	03117

E9.2

Installation & Service Manual for TX9300 Series with 2301 & 2401 iMotion Slide Door Drive

CONCEALED MOUNT
SURFACE MOUNT
FLUSH MOUNT

WARNING - To reduce the risk of injury of persons - Use this operator only with sliding doors.

TORMAX USA INC.
12859 Wetmore Road
San Antonio, TX 78247
210-494-3551
210-494-5930 (Fax)
888-685-3707
www.tormaxusa.com
info@tormaxusa.com

Issue Date: 9/15/2017
P/N: US801452
Version: FW_10.00

TABLE OF CONTENTS

IMPORTANT INFORMATION

SAFETY/ WARNINGS SYMBOLS

NOTE indicates important information specific to the process or steps being performed.

ELECTRICAL VOLTAGE indicates that electrical voltage is present and that caution should be taken to prevent injury or property damage.

CAUTION indicates failure to follow instructions may result in personal injury and/ or property damage.

OPTIONAL COMPONENTS indicates components that are not installed in all systems.

WARNING - Failure to observe the information in this manual may result in personal Injury or damage to equipment. To reduce the risk of injury of persons use this operator only with pedestrian sliding doors.
Save these instructions for future reference.

Installation and Service

Any and all TORMAX equipment must be installed, serviced and inspected by an *AAADM* Certified technician, to meet the current ANSI A156.10 and any local or state building codes.

The person responsible for the daily operation and maintenance of the system is referred to as “End-User”.

It is the technicians responsibility:

1. Review the functions of the equipment with the end-user. *Failure to do so, may lead to the improper use, could cause injury to persons and/ or damage to the equipment.*

2. Familiarize the end-user with the Daily Safety Check Decal and how to perform the walk test procedures.

3. Illustrate to the end-user how to place the door out of service (turn off power or place in P mode or OFF mode of operation), if the equipment does not perform as described in the Daily Safety Check Decal.

4. Recommend to the end-user to have their equipment inspected annually by an *AAADM* certified technician.

Glazing

The glazing material of all doors shall comply with the requirements of ANSI Z97.1, American National Standard Performance Specifications and Methods of Test for Safety Glazing Material Used in Buildings.

IMPORTANT INFORMATION

Electrical Requirements for Installation Personnel

Have a licensed electrician:

- Make all mains primary power connections in accordance to federal, state and local regulations.
- Route mains primary power from power distribution panel (10 amp circuit breaker minimum per operator) to the operator.
- Install a service switch or emergency shut OFF switch, if required by customer or per regulations. This is in addition to the mains circuit breaker to interrupt power, switch must be rated @ 10 amp minimum.

Mains Connection

Connection: N + L1 + PE protected on site with fuse 10 AT, protective earth necessary.

Power rating:

iMotion 2202, 2301: 1 × 230 / 1 × 115 V AC (+5% /– 10 %), 50 – 60 Hz, max. 190 W
iMotion 2401: 1 × 230 / 1 × 115 V AC (+5% /– 10 %), 50 – 60 Hz, max. 310 W

Supply cable: Type H05VV-F, H05RR-F or type S, SO, SJ, SJO, ST, STO, SJT, SJTO or AFS

Before beginning the work described below, check that the mains primary power is switched off. If required, place “Out of Service” tag on breaker or service switch.

It is recommended that any item (i.e. electrical box, conduit) be installed in the header away from moving door components, so not to interfere with the operation of the door.

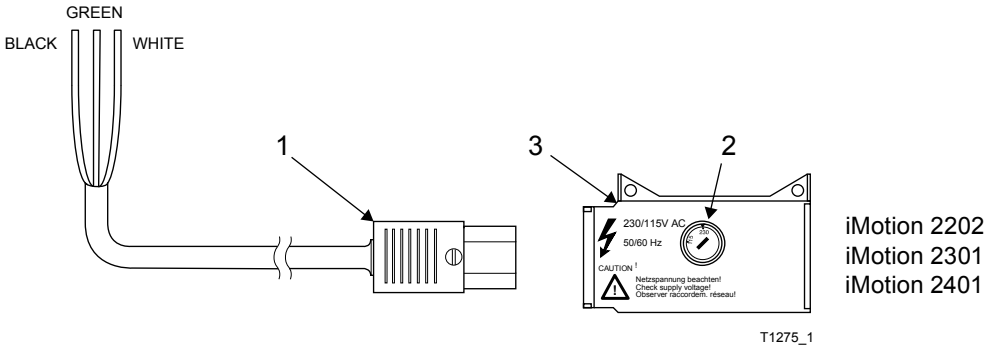

- Route mains cable (1) through provided cable holders to mains supply print (3).
- Check the correct setting of the voltage selector (2).
- Do not apply power to the door until ready for commissioning.
- A system switch (FCP or 3-position switch) must be on site.

Make sure that the mains cable is secured properly to prevent getting into the moving parts of the operator or door system.

The commissioning of the system may only take place through a qualified person trained by the manufacturer and under consideration of the required documents for commissioning and inspection for compliance!

HEADER & JAMB ASSEMBLY

1) Doors with transom proceed to Page 9, 10 for assembly.

2) Shipped in accessory box, install trim plate onto header end bracket as shown.

3) Mount the jamb to the header using the supplied hardware as shown below.

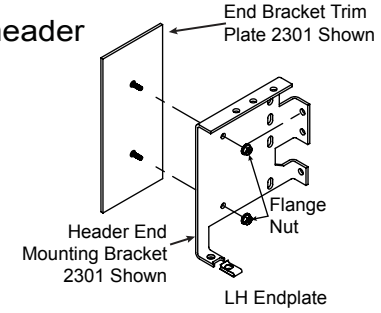

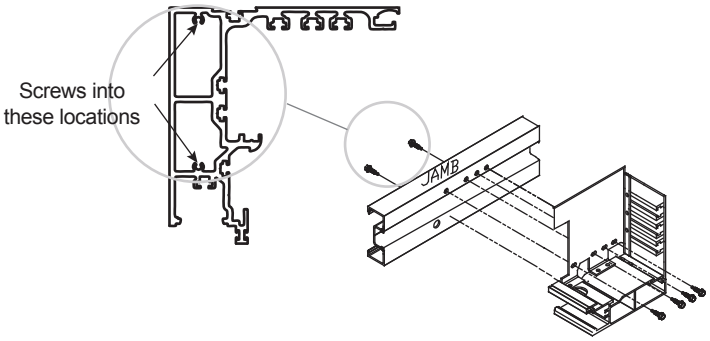

CONCEALED

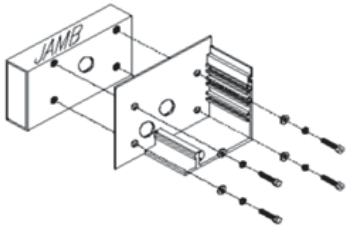

FLUSH MOUNT UTILITY

4) TX9300 single slides with jamb mounted Doorway holding beams, route beam cables into and down the jams, connect the beam pigtails. Inspect & note SO panel beam locations, install opposite Black (TX) cable or Gray (RCVR) cable in jamb. i.e Black cable across from a Gray.

5) Install SO panel bottom guide /s into the jamb and secure with supplied screws.

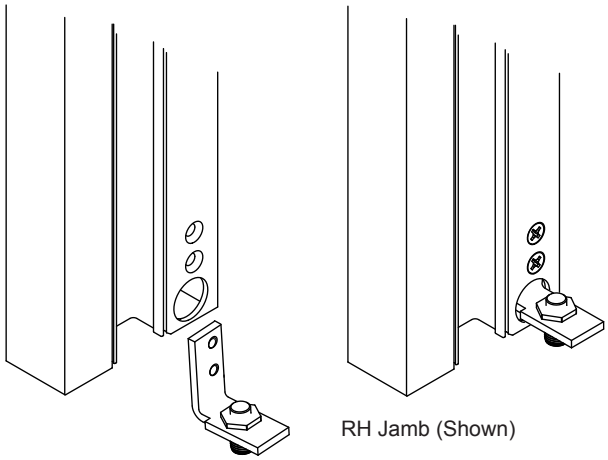

RH Jamb (Shown)

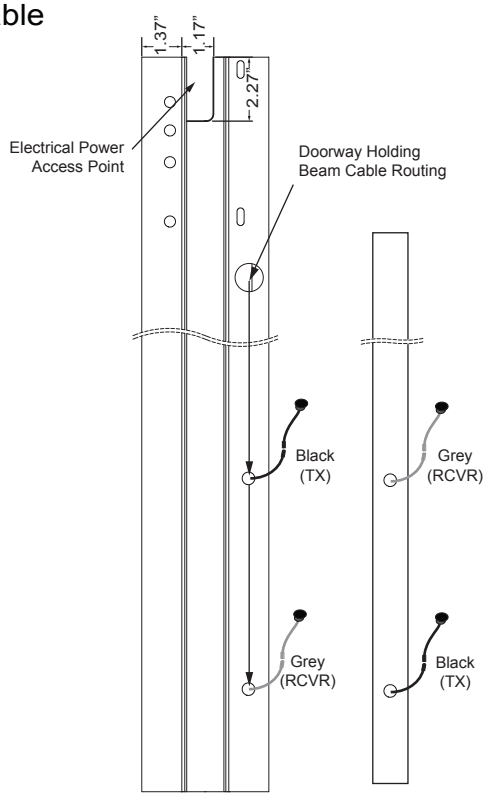

RH Jamb (Shown)

SO Panel

HEADER & JAMB ASSEMBLY PREPARATION

6) Concealed Mount snap in back plate onto the jamb, Surface Mount do not install at this time, first secure jamb to the wall.

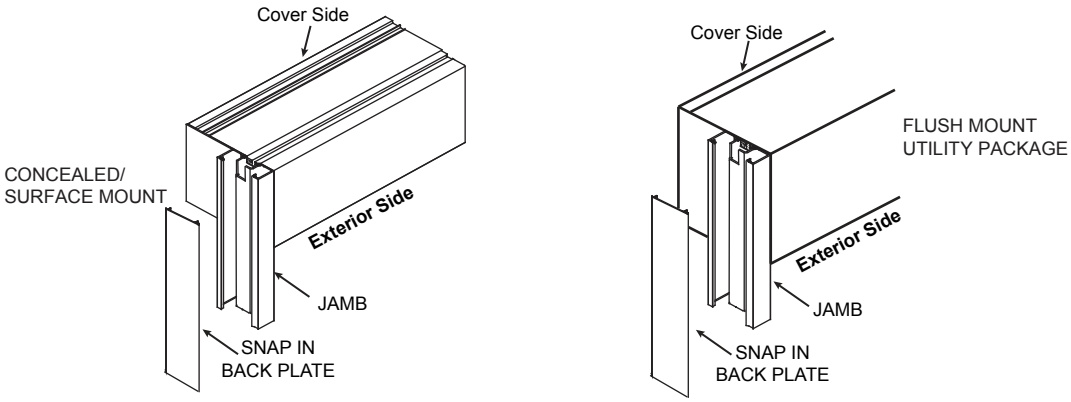

7) The header hole locations is dependent on the type of header. Pre- drill the header prior to lifting the unit into place. See illustrations below.

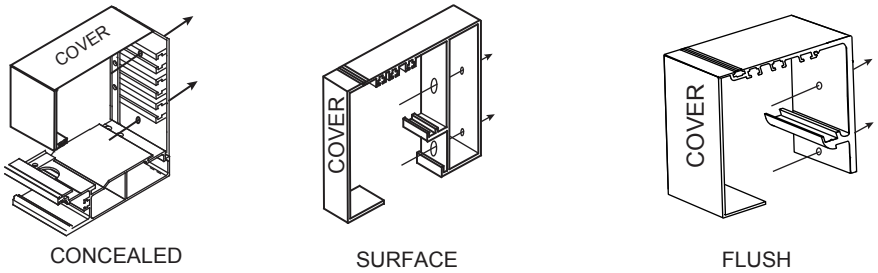

9) **Concealed mount** - Minimum of 6 holes should be drilled through the header The holes should be located at both ends and in the center.

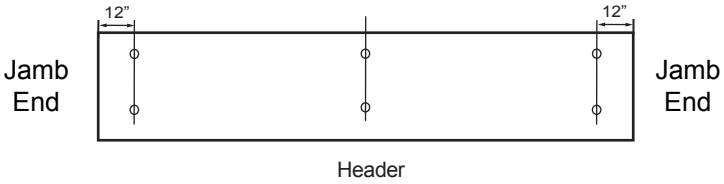

10) **Surface & Flush mount** - Holes should be drilled through the header spaced 48” minimum. With the first hole within 12” from the jamb.

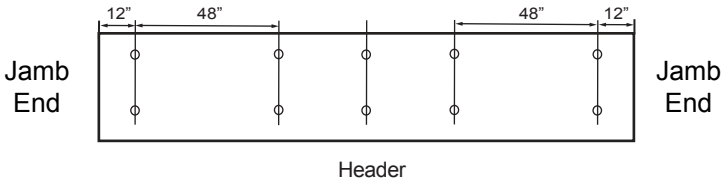

HEADER & JAMB ASSEMBLY INSTALLATION - CONCEALED

1) Determine the highest point of the floor by using a water level. See Illustration 1. Make note of this point.

Recommend securing the jambs at 3 locations (top, bottom, center) as work environment permits. Select a location to limit visibility on final assembly.

Caution should be taken when lifting assembly into place and should never be done by one person.

2) Lift the header/ jamb assembly into place, level the header according to the floor conditions using appropriate shimming material.

3) Plumb the jambs in both directions. See Illustration 2

4) Type of fasteners and securing locations of the jambs will depend on the work environment. It is suggested that the jambs be secured at three locations. Locate the fasteners to limit visibility on the final assembly. See Illustration 1.

5) In the event there is nothing to mount the jamb to vertically a L-bracket can be installed at the bottom of the jamb. Install bracket to provide the most support in the least visible location possible. See Illustration 3.

6) Install the Jamb snap in filler profile. See Illustration 3.

Illustration 1

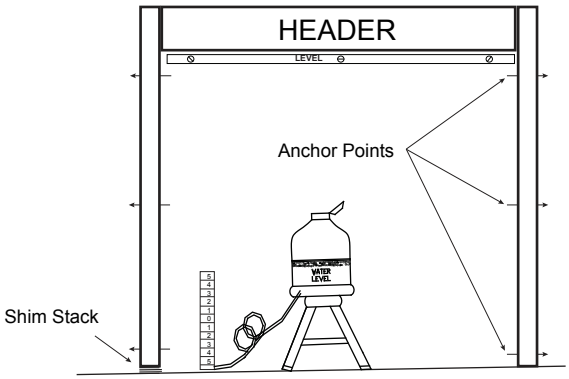

Illustration 2

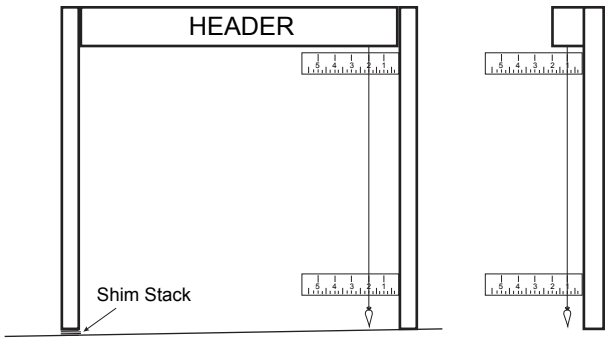

Illustration 3

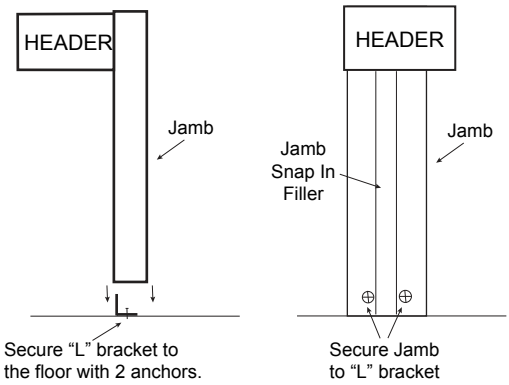

HEADER &JAMB ASSEMBLY INSTALLATION - FLUSH MOUNT

Caution should be taken when lifting assembly into place and should never be done by one person.

1) Recommend securing the jambs at 3 locations (top, bottom, center) as work environment permits. Drill holes through jamb side wall adjacent to the wall.

2) Lift the header/ jamb assembly into place, level the header according to the floor conditions using appropriate shimming material.

3) Check both jambs for plumb and square. Check jamb spacing at the header, keep the same width spacing at the bottom of the jambs.

4) Type of fasteners and securing locations of the jambs will depend on the work environment.

5) In the event there is nothing to mount the jamb to vertically, a L-bracket can be installed at the bottom of the jamb. Install bracket to provide the most support in the least visible location possible.

6) Snap jamb back plate onto the jamb.

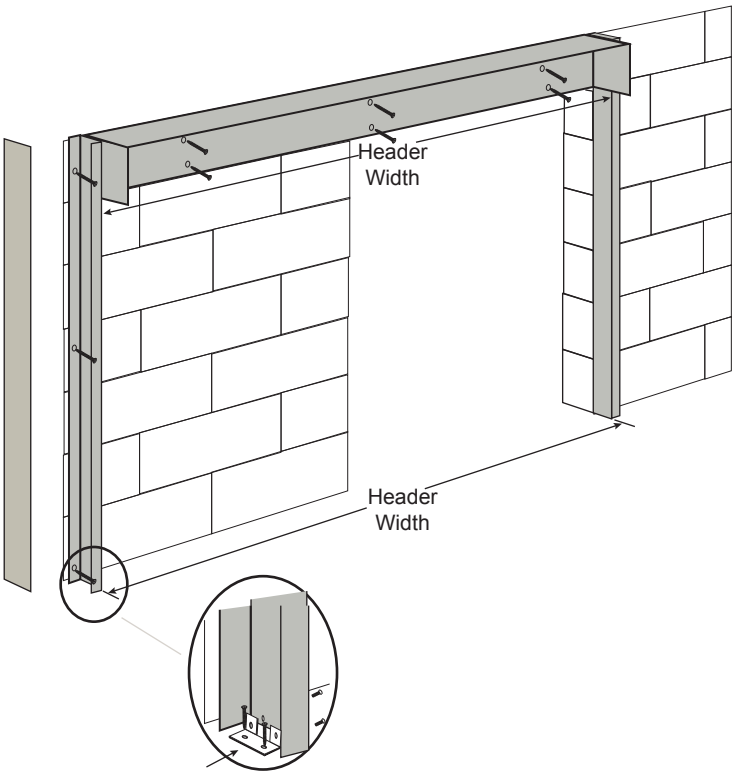

HEADER & TRANSOM ASSEMBLY

Install T-Nuts into channel on top of header before attaching jambs. T-Nuts used for securing Transom Intermediate Vertical Bracket (G). Check Accessory Pack for Hardware!

1) Insert T-nuts, attach Jambs (B) to Header (L) with hardware as shown below.

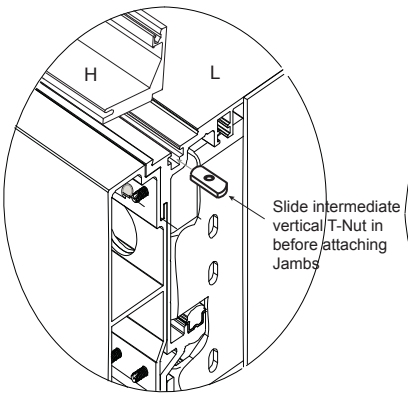

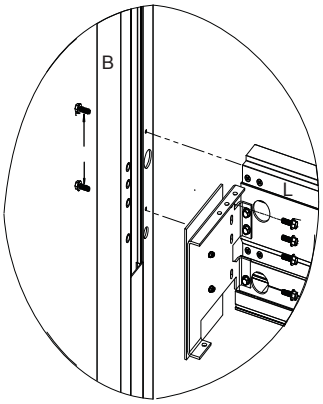

2) Make appropriate clearance hole /s for 120V electrical power cable.

3) If equipped with jamb mounted photo electric (safety) beams, check SO panel beam locations black and grey cables. Route cables down the jamb and connect beams as shown.

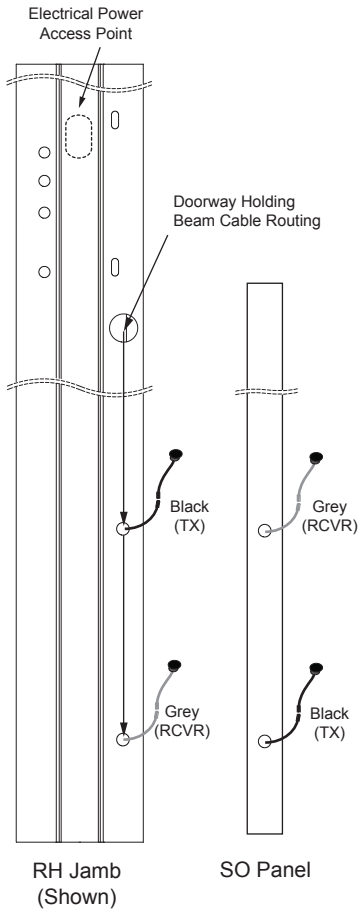

4) Snap jamb tube back plate (A) onto jamb (B).

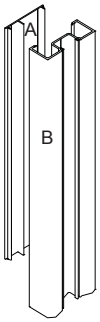

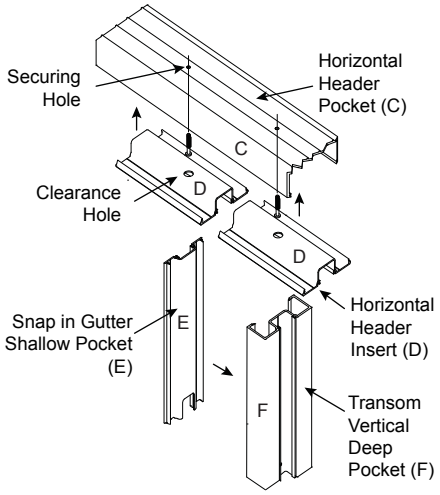

The factory will install Horizontal Header Insert (D) into the Horizontal Header Pocket (C) and Snap in Gutter (E) into Transom Vertical (F), same as jamb extrusion.

5) Drill a securing hole (size depends on mounting screw) through both Horizontal Header Insert (D) and the Horizontal Header Pocket (C) .

6) Drill a larger clearance hole into the Horizontal Header Insert (D), so that the screw can pass through and secure the Horizontal Header Pocket (C).

HEADER & TRANSOM ASSEMBLY

The Snap in Gutter (E) and Transom Vertical (F) have 2 pocket sizes. Never have two (F) assemblies (shallow to shallow) facing each other. **Glass will not fit.**

7) Determine intermediate vertical locations by placing Transom gutter (H) onto the header, verify spacing with openings in Horizontal Header Pocket. Move T-Nuts between Transom Gutter (H).

8) Position L-Bracket so header mounting screw is on deep pocket side of intermediate vertical assembly (F). Loosely secure L-Bracket (G) onto the header (L).

9) Install and secure intermediate vertical assemblys (F) onto L-Bracket with two supplied screws.

10) Snap in Transom Gutters (H), Center intermediate vertical assembly (F), tighten screw into header T-Nut. Install remaining intermediate verticals.

11) Install Horizontal Header Pocket (C) onto jambs (B) and intermediate vertical assembly (F).

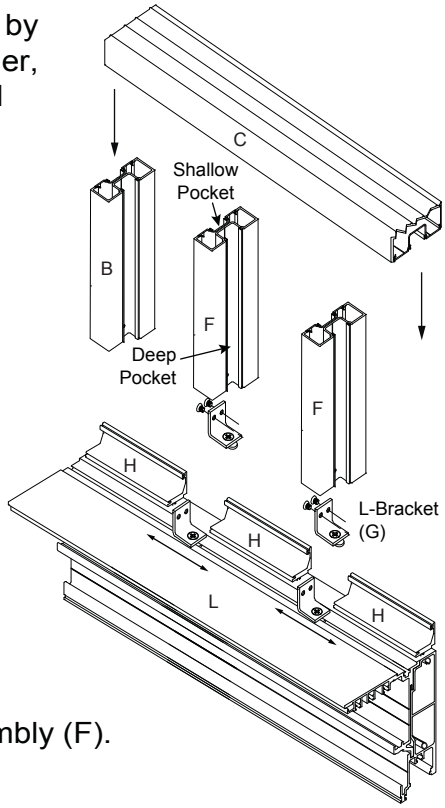

Caution should be taken when lifting assembly into place and should never be done by one person.

Refer to page 7 for details in installing and securing the door package.

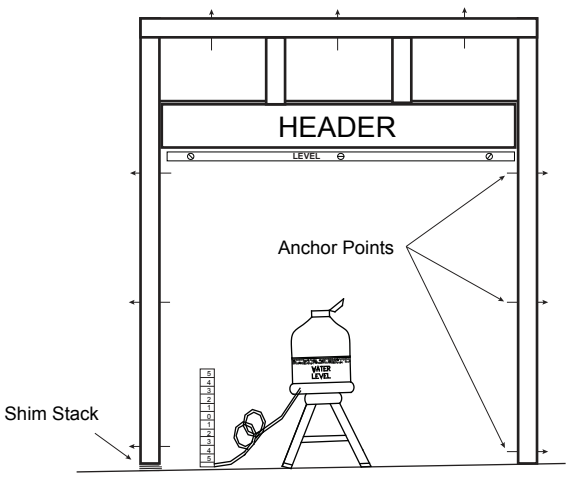

TRANSOM GLASS - TRANSOM ASSEMBLY DETAIL

Glass cleaner can be used as a lubricant to install the vinyl (M,N)

1) Install appropriate glazing block (I - 1” glass, J - 1/4“ glass) onto (H).

2) Install the glass by placing it into the deep pocket on the vertical jamb, once glass clears opposite side vertical, center between pockets and place on glazing blocks.

3) Install transom face stop (K) on header and finish by installing the appropriate vinyl (M - 1/4” glass, N - 1/” glass).

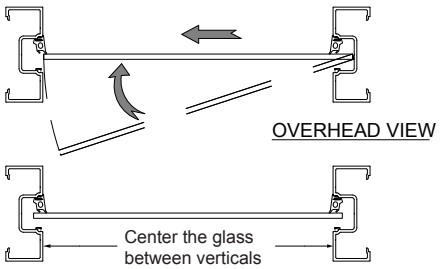

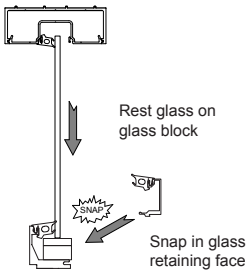

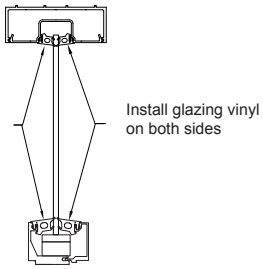

Transom Assembly Detail

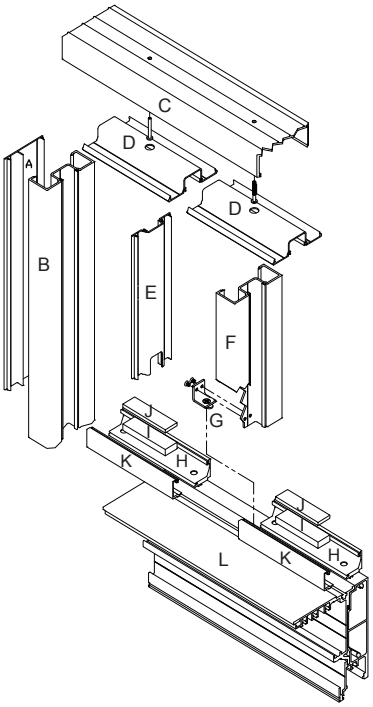

A) US800958 Jamb Tube Back Plate
B) US800956 Jamb Tube
C) US800829 Horizontal Header Pocket
D) US800828 Horizontal Header Insert
E) US800957 Snap in Gutter
F) US800956 Transom Vertical , Jamb extrusion
G) US801048 Transom Vertical Bracket
H) US801041 Transom Gutter, top of header
I) US801044 Glazing Block 1” glass
J) US801043 Glazing Block 1/4” glass
K) US801042 Transom Face, top of header
L) US801619 Header
M) US801051 Transom Vinyl, 1/4” glass
N) US800822 Transom vinyl, 1” glass

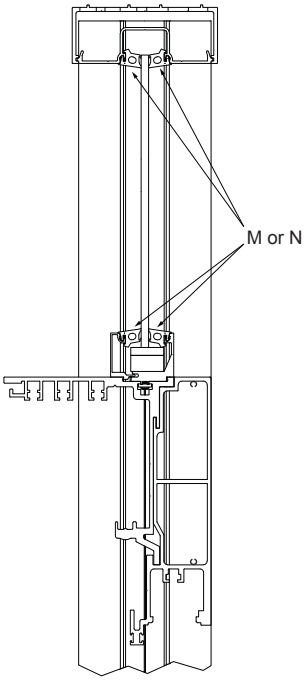

THRESHOLD INSTALLATION

1) If using a Combination threshold align the threshold to the interior edge of the jamb. See Illustration 1.

2) If using a Double Beveled or Recessed threshold center the threshold to the jamb. See Illustration 1.

Use a chalk line from jamb to jamb to create a reference line.

3) The threshold must be secured to the floor using the appropriate fasteners for the type of floor. Fasteners should be spaced 18“ apart for the length of the threshold, starting 1 1/2” from each end. See Illustration 2.

4) If required use appropriate shim material to level the threshold as shown below. Measure from the top of the threshold to the bottom of the header in 18” inch increments the full width of the header to insure the header and threshold are parallel to each other.

5) The threshold must be supported through its entire length. Mortar works best where a large gap is present, as the threshold could become deformed over time and interfere with door operation.

If a trip hazard is created by leveling the threshold then the transition should be eased to eliminate this hazard.

Illustration 2

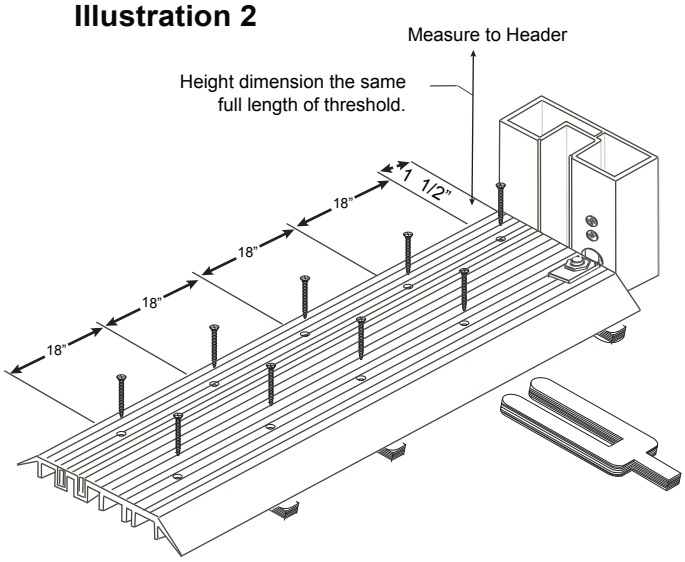

Illustration 1

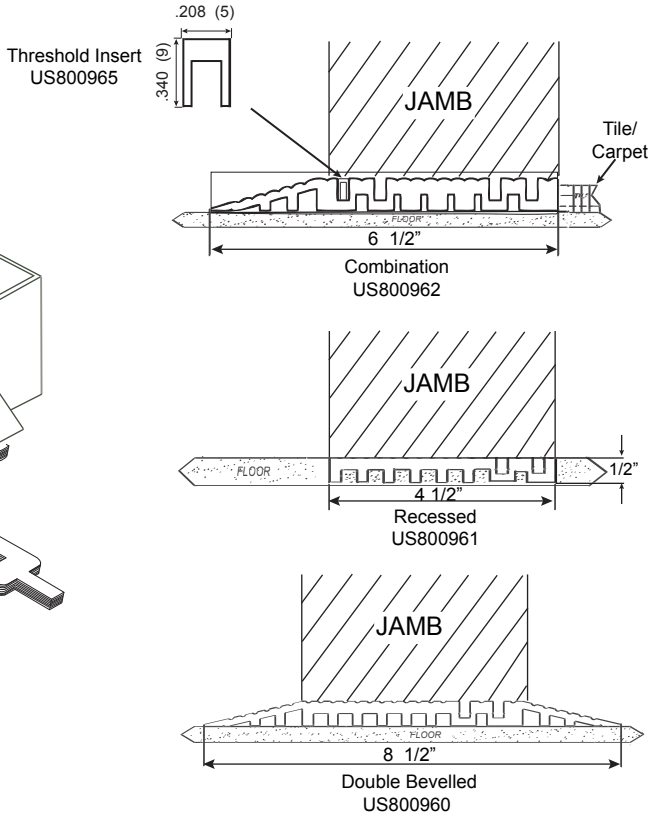

SO - PANEL INSTALLATION

1) Install the SO bottom pivot jamb/threshold portion using supplied hardware. as shown below in illustration A.

2) Remove comdor cover to expose SO top pivot header portion. If equipped, route safety beam wires through top pivot header portion and through access hole into the header. Route wires to control.

3) Unlock top pivot door portion as shown below. At 90° degrees, lift door panel onto bottom pivot jamb/ threshold portion.

4) Align top pivot door/ header portions, pull slack out of safety beam wires and lock top pivot door portion.

5) Adjusted door panel height in closed position with supplied bottom pivot wrench.

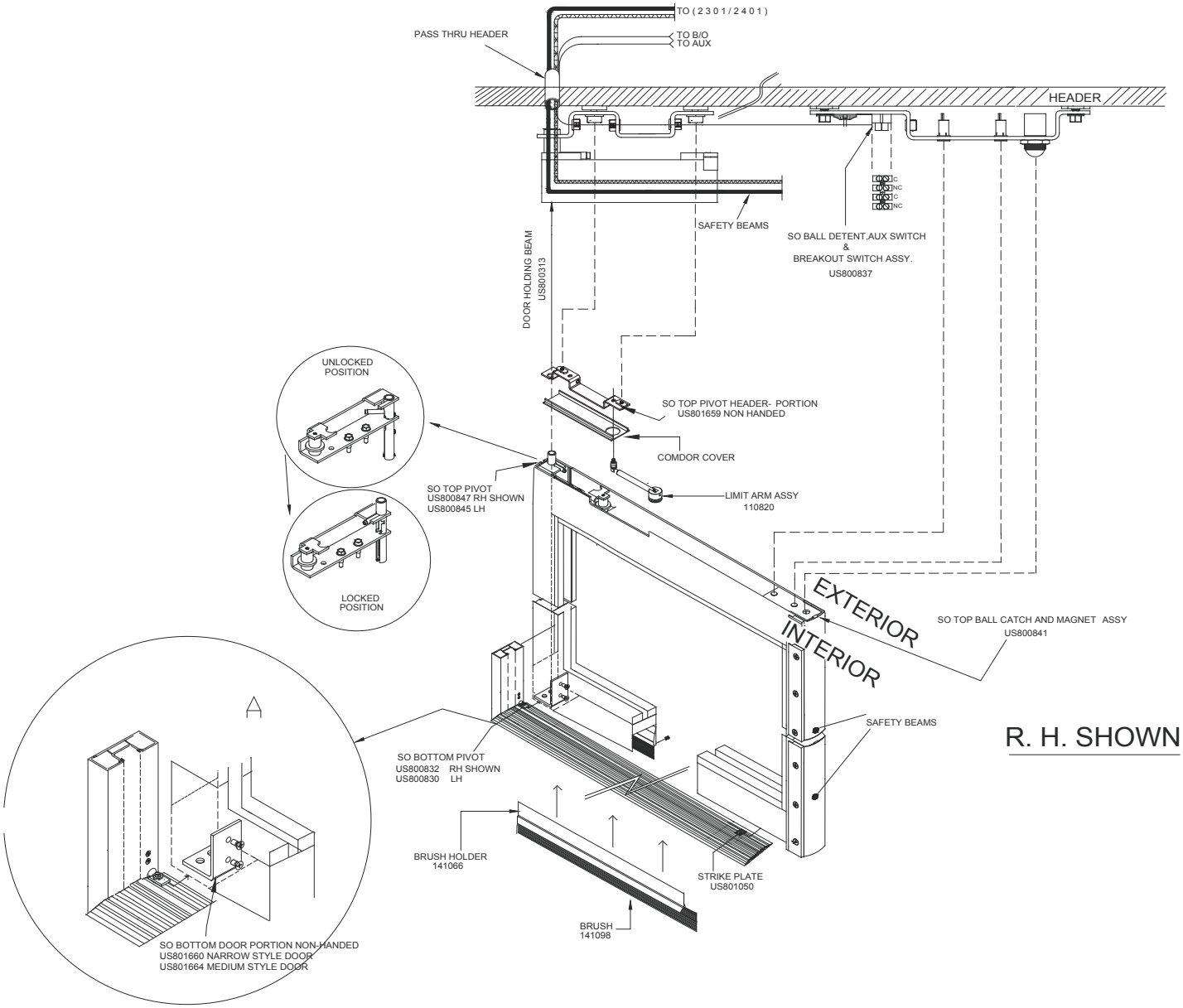

SO - PANEL INSTALLATION

6) Check glass block placement as shown below in Illustration 1. Install the glass and slide glass blocks into position.

7) Install Glass Stop face as shown in Illustration 2.

8) Adjust Jacking Screw to raise the leading edge of the door up as shown in Illustration 3. Maintain a straight sight line at the header when the door closed.

9) For existing doors without jacking screw, cross block the glass to raise the leading stile of the door or order a Jacking Screw kit:

1/4” Glass Part# US801690
1” Insulated Glass Part# US801691

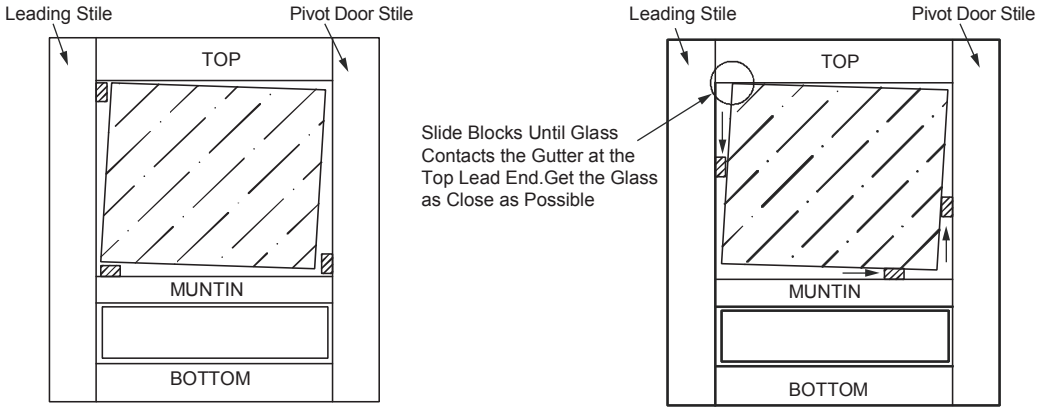

Illustration 1

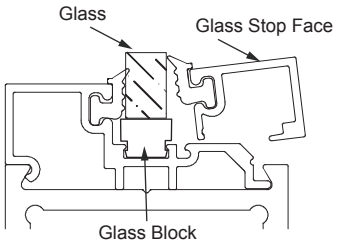

Illustration 2

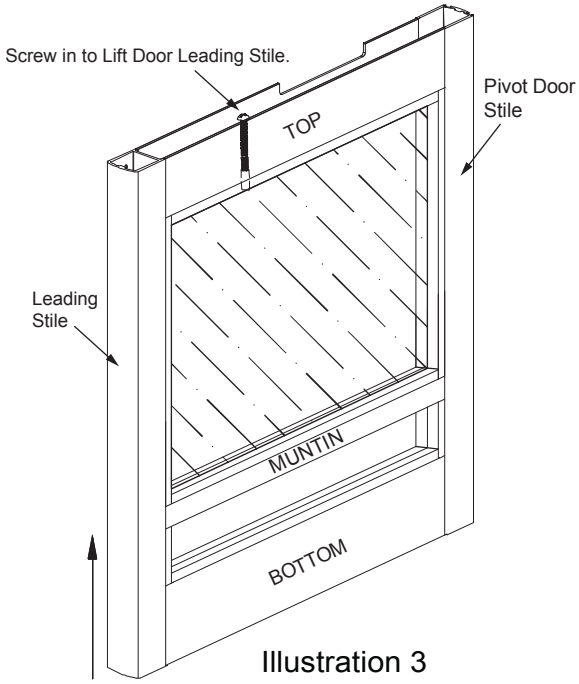

Illustration 3

SX-PANEL INSTALLATION

Tormax recommends cross blocking the glass similiar to the SO panel, as it will provide support in the door breakout position.

The lead edge trolleys mounted to the belt are shipped with the anti-risers tight against the track to prevent damage in shipment, remaining trolleys are shipped in accessory box.

1) If equipped with door sweeps, install the sweep into the holder assembly in the bottom of the SX panel and secure with supplied set screws.

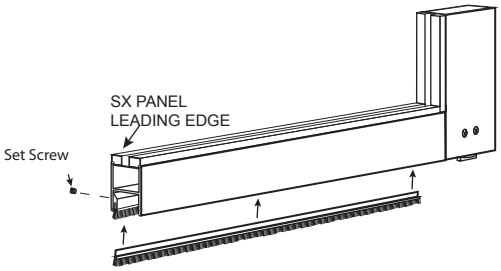

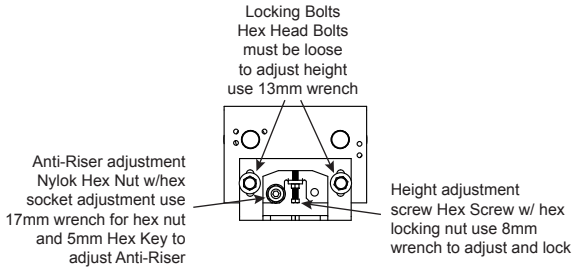

2) Loosen anti-risers to re-position the trolleys. Adjust the height adjustment screw to lower the trolley, as this will help when lifting the door into place.

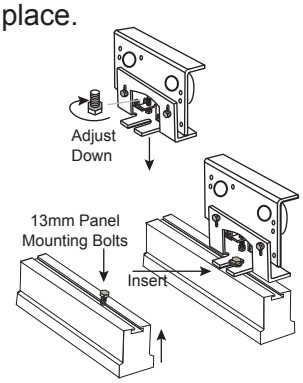

3) Loosen the two 13mm mounting bolts on top of the SX-Panel until only two threads are engaged.

4) Lift door up onto the trolley and tighten panel 13mm mounting bolts to keep the panel from falling off the trolleys.

5) Release the bottom door guide by loosing set screw, align with the guide channels on the threshold.

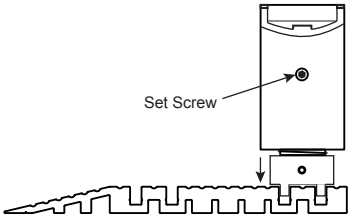

6) Adjust the door panel so that it is parallel to the header and makes slight contact with the weather seal on the header. (minimizing drag) Tighten 13mm mounting bolts.

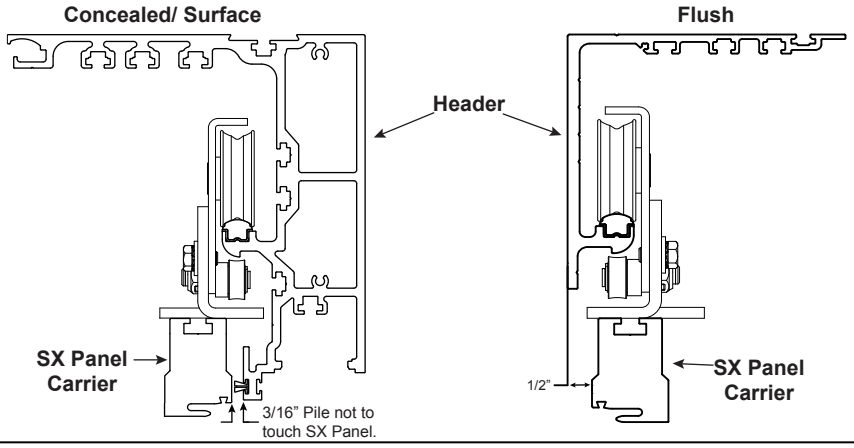

SX-PANEL ALIGNMENT

The alignment of the SX-Panel is critical to the functionality of the sliding door.

1) Loosen the 13mm locking bolts on each trolley 1-2 turns, loosen 8mm locking nut on height adjustment screws.

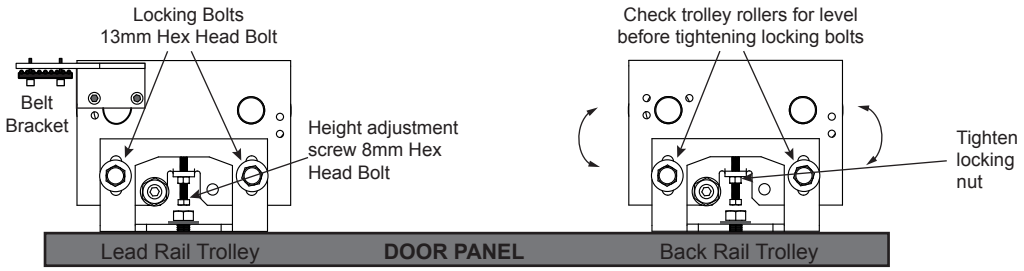

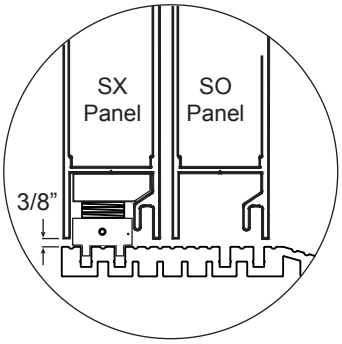

2) Adjust the 8mm door height screw to position the door at the proper operating height and to level the door panel.

3) Fine adjust the door height with each trolley to level the door and line up the sight lines of the vertical rails and/ or jambs as shown below.

4) Tighten locking nut and locking bolts.

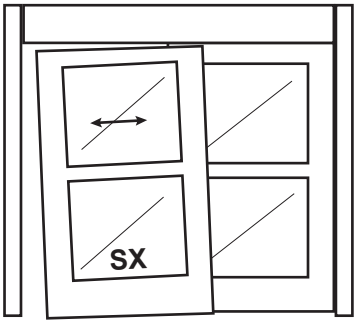

Incorrect

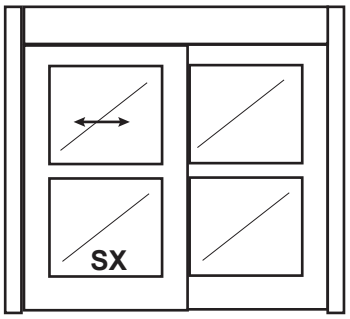

Correct

5) Adjust the bottom guide up a 1/16” off the bottom guide track,lock in place with set screw. Slide door open and close, check for proper engagement in the track.

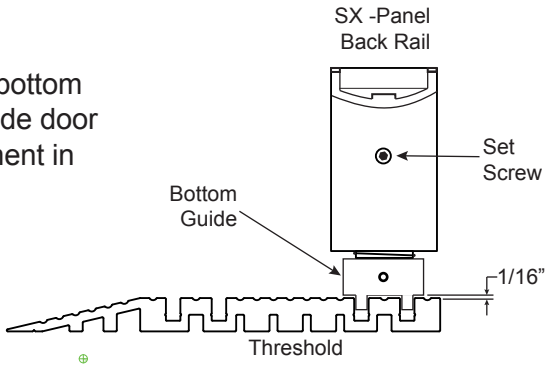

6) Adjust anti-riser 17mm wrench/ 5mm Hex key for a gap of .020” (approximately the thickness of a credit card) between the roller and the track.

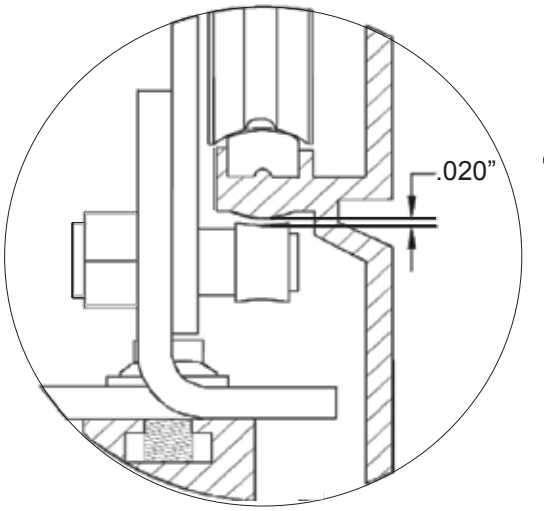

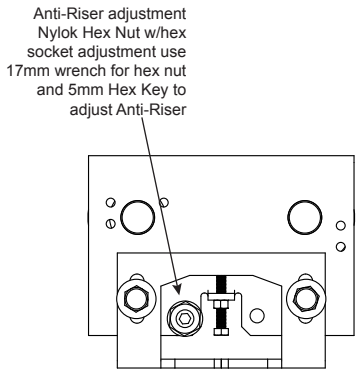

7) In the door closed position, loosen door sweep set screws, adjust the door sweep(s) to make slight contact with the floor. Re-tighten set screws.

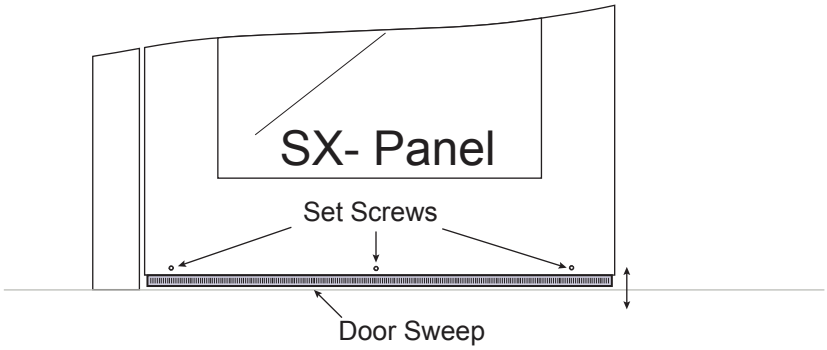

8) Slide the door panel(s) open and close, checking that the door sweep/s does not bind on the threshold.

9) Doors should slide freely with two finger pressure.

ACCESS CONTROL ASSEMBLY

If the door was ordered with the access control feature, the major components (panic device, electric lock) are pre-installed at the factory. Adjustments will need to be made.

1) The door in the closed position, check the alignment of the lock module with relationship to the locking pins located on top of the trolley(s).

2) Loosen the (4) 4mm Hex head bolts securing the lock module, loosen the 10mm bolts securing the locking cam brackets.

3) Adjust locking cam(s) and lock module for a minimum clearance of 1/32” between locking plate and cam(s). Secure lock module and cam brackets.

At no point should the locking cams come in contact with each other or the locking plate.

Electric Lock

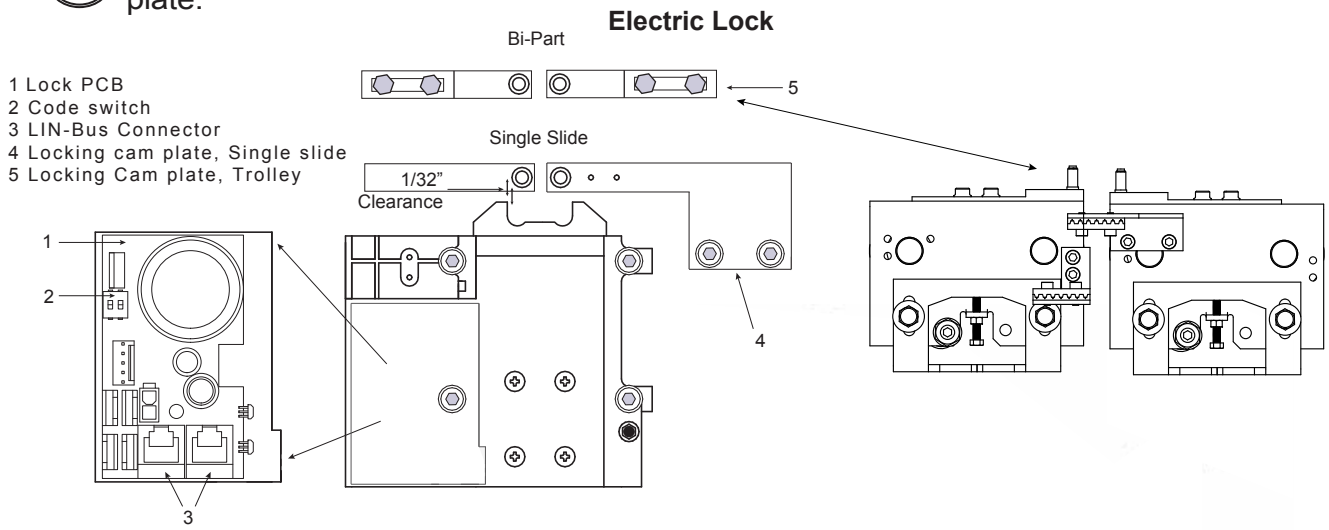

Panic Hardware

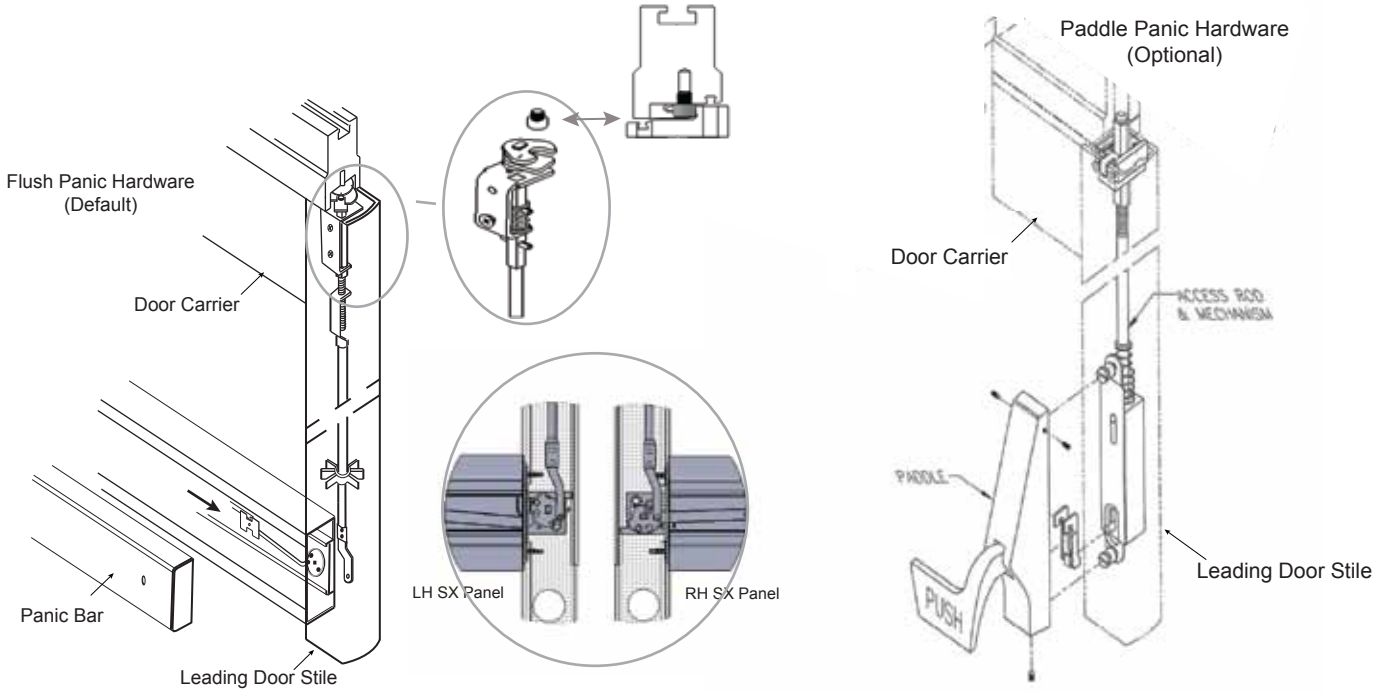

DOOR STOP ADJUSTMENT

1) The SX Panel door stop should be adjusted to provide a 1” gap (Finger Protection) between SX Panel and O-Panel/ P-Panel.

2) To increase the finger guard distance, move the stop towards the door opening direction.

3) To decrease the finger guard distance, move the stop towards the door closing direction.

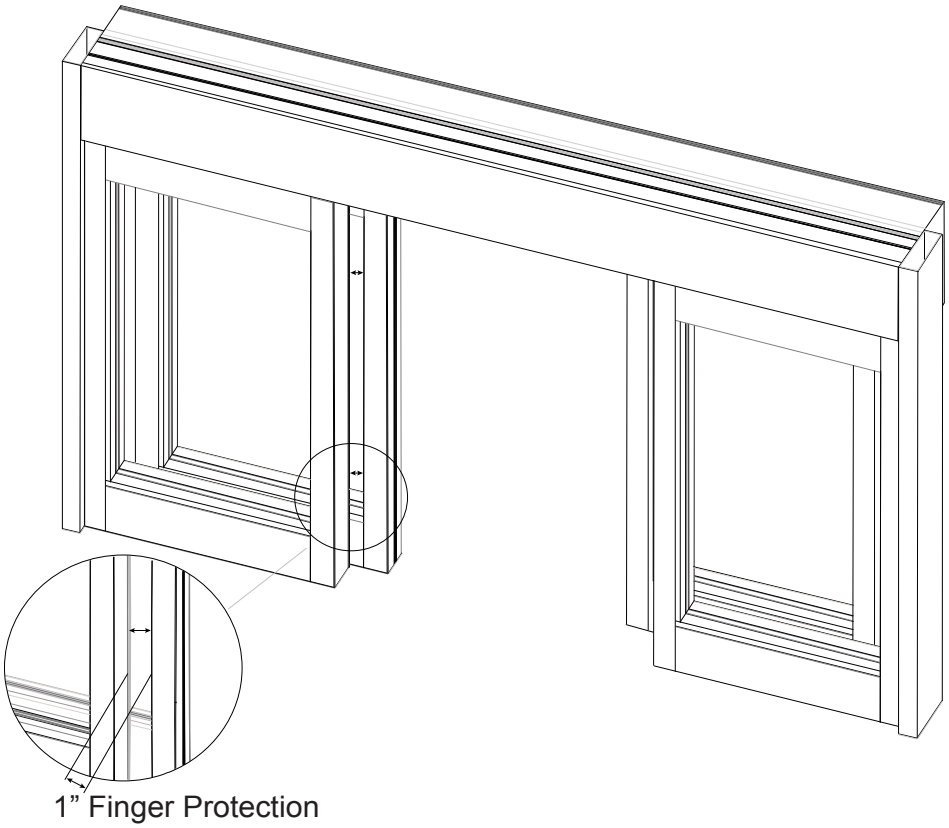

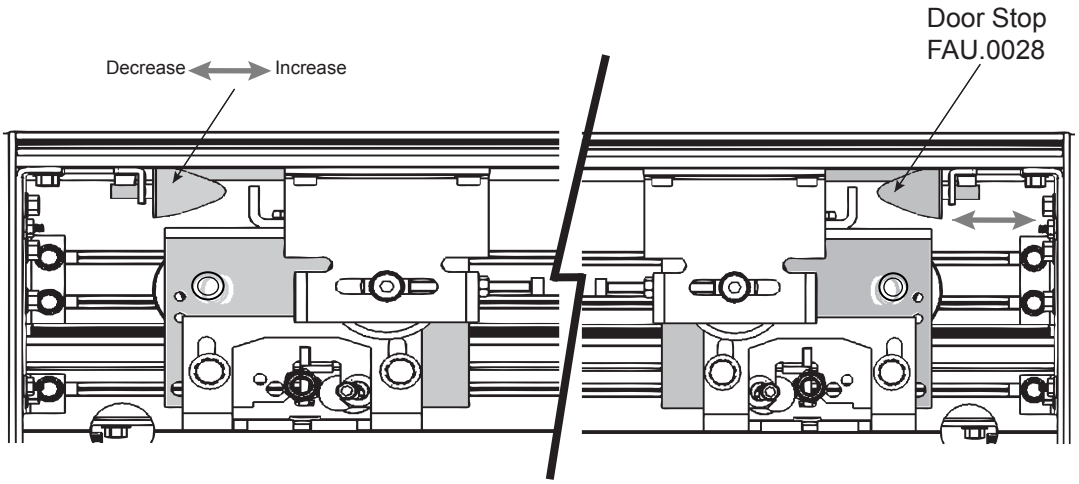

SENSOR ROUTING

Refer to the sensor manual for maximum mounting height of the sensor. The maximum mounting height on the header is 2” measured from the bottom of the header.

1) Determine the center of the Clear Door Opening, align and apply sensor template onto the header drill hole for wire routing.

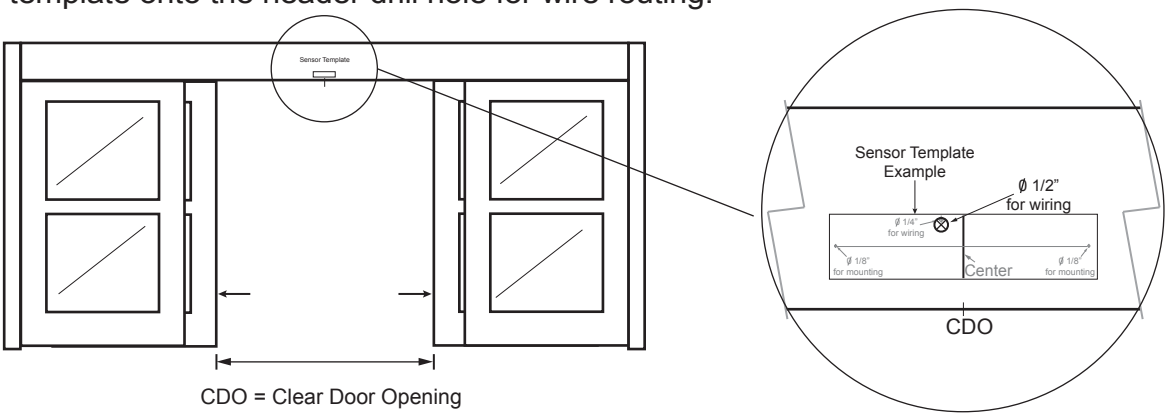

2) Insert sensor cable through the header as shown shown below.

Bi-Part

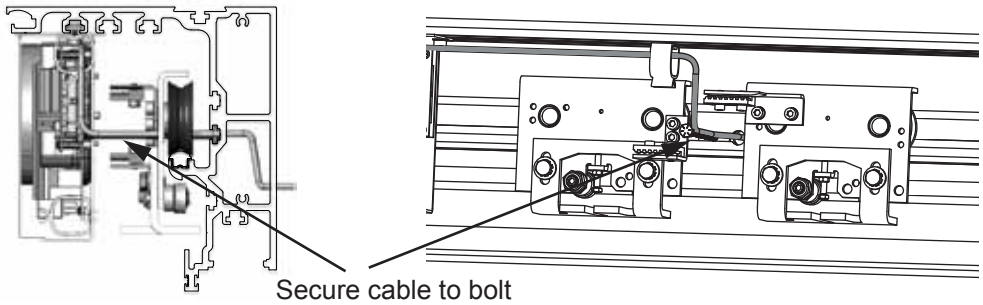

Single Slide

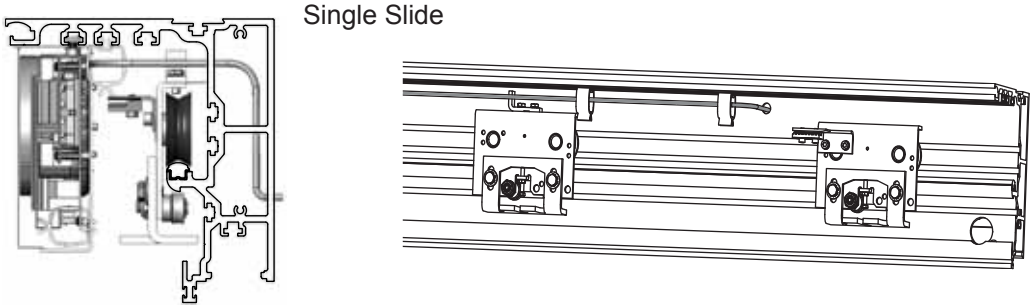

3) Route sensor cable through the header to the control. Keep cables clear of any moving parts. Recommend zip tie cable to 1st plastic clip inside the header for non-cover side sensor.

Do not connect sensor cables to the control at this time. Sensors will be connected after setup is complete.

PRIMARY POWER CONNECTIONS FOR TX9300

All primary electrical connections should be completed by a licensed electrician! The unit requires 115 VAC as primary power.

1) Remove power plug by pressing red locking tab to make primary power connections.

2) Check voltage switch is set to 115.

3) Insert power plug when ready to perform teach-in, programming and overall performance check.

Release for power plug located on bottom.

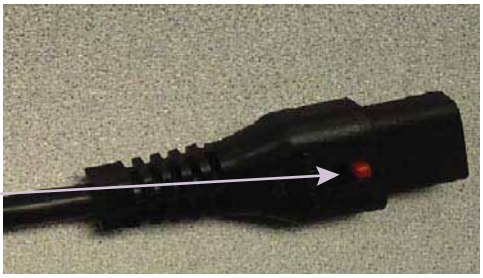

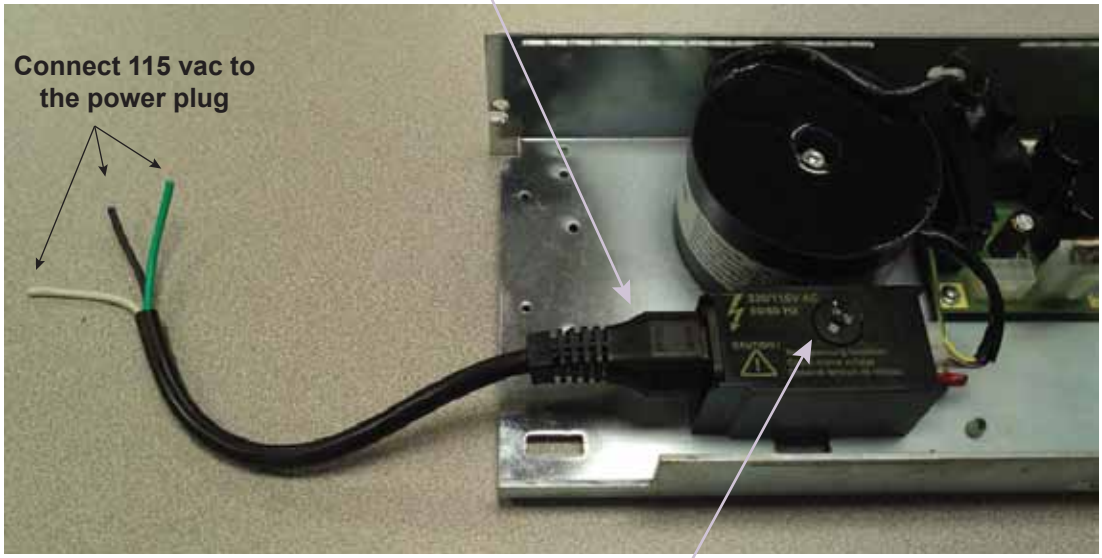

Set to115 v

FUNCTIONAL CONTROL PANEL (FCP) DESCRIPTION / INSTALLATION

The Functional Control Panel (FCP) is the interface between the door system and the end user/ technician. The FCP will be factory installed on the cover side of the header or field installed in a remote location dependent on customer requirements.

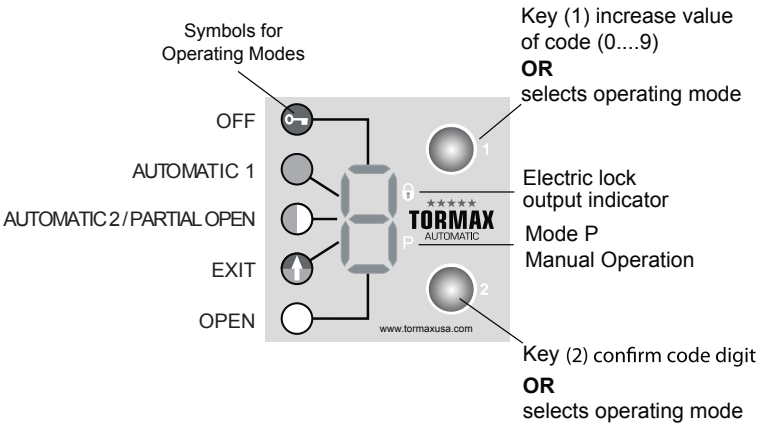

The FCP has 2 function levels:

Level 1 - End user

- Select operating modes
- Display three-digit fault codes.
- Access protected eliminates unauthorized programming.

Level 2 - AAADM Certified technician

- Access protection, access code (111)
- Programming door system to comply with the current ANSI 156.10 standard.
- Displays currently set parameter.
- 10 min time out after the last programming entry is made.

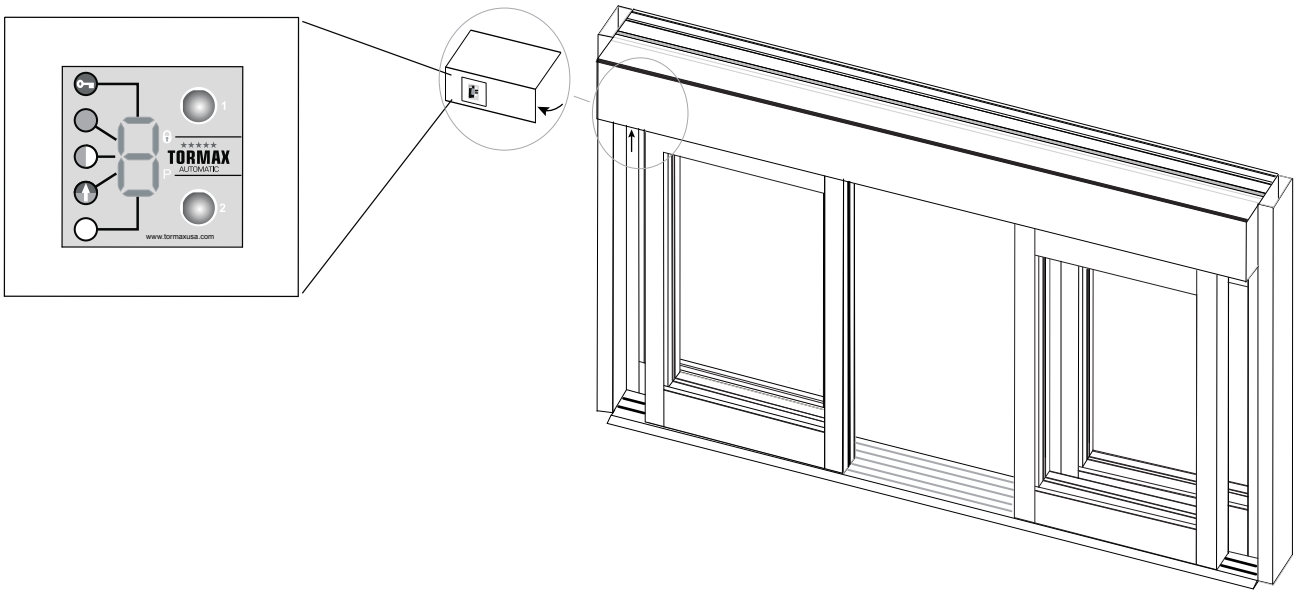

DESCRIPTION OF FCP OPERATING MODES

The 6 modes of operation is selectable on the Functional Control Panel (FCP) by utilizing buttons 1 or 2. Button 1 moves LED clockwise, button 2 moves counter clockwise.

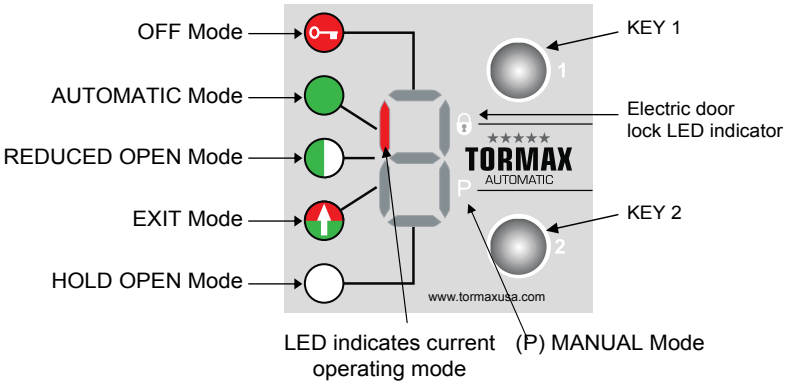

OFF Mode

The interior and exterior sensors are inhibited after the door reaches the fully closed position, if equipped with an electric lock the lock will engage. Key switch input will open the door, when activated.

Automatic 1 Mode

Two-way traffic, typical setting for normal operation. This setting allows interior & exterior sensors, key switch and safety device to operate the door.

Automatic 2 Mode (Reduced Opening)

Allows the door to open with a reduced opening width. Door opening width and hold open time can be adjusted. Hold open time adjustment separate from Automatic 1 mode.

EXIT Mode

Allows interior activation and key switch inputs to operate the door system. Exterior activation input is inhibited in door closed position, but becomes active when door is operated by interior activation or key switch inputs.

HOLD - OPEN Mode

Hold the door system open.

MANUAL OPERATION (P) Mode

Allows the door to be used manually without the use of sensors, push and pull activation. Indicates when the door is in panic/ break-out position.

The technician will clearly explain and demonstrate the modes of Operation to End user.

PROGRAMMING WITH THE FCP

Button 1 - Increments the number or letter by one (0 - 9,a,b,c,...back to 0)
Button 2 - Confirms or enters the displayed character into the control

Place FCP display into “P” Park/ Manual mode during programming

1) Start Access Code

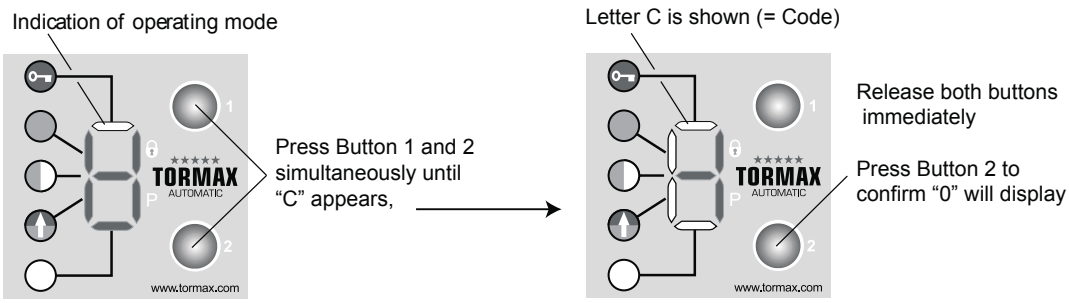

2) Entering Access Code 111

A) Select the number “1” with button 1, confirm/ enter with button 2.
B) Repeat this step two more times entering the code 1-1-1.
C) A letter “P” will display indicating in Program mode.

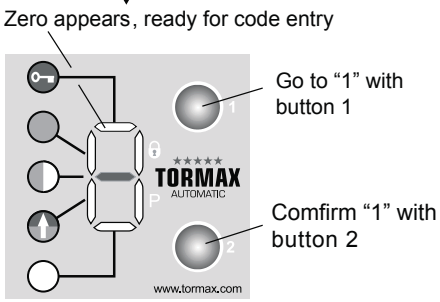

Example 1: Enter access code 111

Display on FCP

Press both buttons 1,2 simultaneously until	C	is displayed, release both buttons
Press button 2 and	0	is displayed
Press button 1 to display	1	Press button 2 to enter “1”
	0	is displayed
Press button 1 to display	1	Press button 2 to enter “1”
	0	is displayed
Press button 1 to display	1	Press button 2 to enter “1”
	P	is displayed, now in program mode

Time out occurs, if no input is made during 10 s, the FCP reverts back to displaying P, then displays the operating mode.

Within 10 minutes you can enter the programming mode by pressing both keys simultaneously and P will display. If no further adjustments are made after 10 minutes the FCP will time out and require access code re-entry. Repeat example 1.

3) Start Programming Level

Example 1: Enter code 030 to Detect and store reference distance

Display on FCP

Press both buttons 1,2 simultaneously until	P	displays, release both buttons
Press button 2 and if	0	appears, Press button 2 to enter “0”
If	0	does not appear, Press button 1 until displayed, Press button 2 to enter.
	1	will display automatically
Press button 1 until	3	is displayed, Press button 2 to enter “3”
a slow flashing	0	is displayed
Press button 2 to enter	0	
	P	will rapidly flash for 1 sec
	P	will display for 10 sec then return to operating mode.

A Reference open/ close cycle will be performed, upon activation

Example 2: Enter code 036 to Detect and store door mass (weight)

Display on FCP

Press both buttons 1,2 simultaneously until	P	displays, release both buttons
Press button 2 and if	0	appears, Press button 2 to enter “0”
If	0	does not appear, Press button 1 until displayed, Press button 2 to enter.
	1	will display automatically
Press button 1 until	3	is displayed, Press button 2 to enter “3”
a slow flashing	0	is displayed
Press button 1 until	6	is displayed, Press button 2 to enter “6”
	P	will rapidly flash for 1 sec
	P	will display for 10 sec then return to operating mode.

The process to determine door mass requires the door to be activated multiple times up to 14 times.

! After the 2nd code digit has been confirmed, the flashing digit show set value of the parameter (= 3rd digit of the parameter code). If the value is confirmed the FCP will rapidly flash for 1 sec then display “P” again.

! Quickly pressing and releasing both buttons simultaneously the FCP will return to displaying the mode of operation.

QUICK START UP

The control will be factory programmed to the function of the application. Do not perform a factory reset or an Auto-configuration.

Requirements

- Check all fasteners for security.
- Wire routing & connections, LIN - BUS connections are complete and clear of moving parts.
- Do not connect Doorway Holding (safety) beams and Overhead Sensors to the door control.
- If equipped, connect battery back-up module 8 pin connector to door control.
- If equipped, with an electric lock check electrical connection (lin-Bus) and for proper clearances between lock and locking posts.
- All mechanical adjustments completed:

  * SX sliding panel adjustments: height adjustment, door sweep height adjusted, no rubbing against weather seals, Bottom Guide/ s, Anti-riser/ s, panel/s move freely/ two finger pressure.

Self-monitored Sensors - Configuration

Do not connect the overhead sensors or doorway holding beams to the door control at this time. Insert jumpers into terminal A pins 2, 3 and 6, 7 and terminal B pins 2, 3 and 6, 7 as shown below.

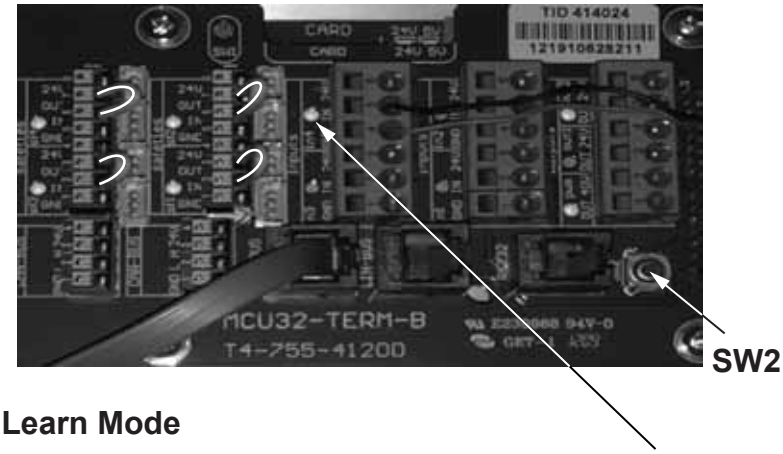

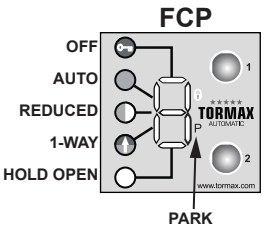

Learn Mode

1. Check that input in4 terminal D pins 4,5 LED is “ON”, if not:
   A. Check breakout circuit - SO stationary panel/ s are in closed position.
   B. Change ON/ OFF, ON/ OFF/ HO switch position till LED illuminates as shown above.
2. Enter Code 030, 036 into the FCP display.

It is especially important to limit the flow of traffic during the following process as the activation or safety devices are not operational.

3. Change operating mode to “AUTO” on the FCP display. Push-n-release SW2 button to activate the door open.
4. Cycle the door open with a momentary push of SW2 button, each time the door reaches the closed position. Process can take up to 14 activations. Process is complete with an audible beep from the control and the H65 no longer is displayed on the FCP.

QUICK START UP

SW2 Switch is the small blue button on the control to activate the door if pushed momentarily. When used to activate the door there is no hold open time, door goes fully open and closes immediately.

5. Remove jumpers from safety inputs (sf1,2,3,4) connect the safety beams in terminal A (sf1,2). Connect self-monitored sensors into terminal B (sf3,4) refer to sensor connection diagrams for connections and configuration settings.

Additional Adjustments

Below are frequently used adjustments, refer to the Programming Charts section for a more detailed list.

Function Code:	Function:	Settings Code:											
103	Hold Open Time, Automatic Mode 1	0	1	**2***	3	4	5	6	7	8	9	Code	Additional Settings on Programming Table
		0	0.5	1	2	3	5	7.5	10	12.5	15	Sec.	
113	Hold Open Time, Automatic Mode 2	0	1	**2***	3	4	5	6	7	8	9	Code	
		0	0.5	1	2	3	5	7.5	10	12.5	15	Sec.	
212	Closing Speed	0	1	2	3	**4***	5	6	7	8	9	Code	
		3.15	6.3	9.45	12.6	15.75	18.9	22.05	25.2	28.35	31.5	Inch/s	
224	Close Check Speed	**0***	1	2	3	4	5	6	7	8	9	Code	
		.59	.63	.71	.82	1	1.18	1.43	1.68	2	2.36	Inch/s	
41_	Reduced Opening Width	0	1	2	3	4	5	**6***	7	8	9	Code	
		10	20	30	40	50	60	70	80	90	100	%	
551	Lock in OFF, EXIT mode												

Always inspect and adjust the installation to be in accordance with the current ANSI A156.10 standard.
Test all FCP functions for proper operation.

TROUBLESHOOTING

Troubleshooting - New installations

If the door is running backwards, FCP in HOLD OPEN door physically closed, FCP in OFF (red key) door is physically open.

1. Enter the code listed below for door type to change motor rotation.

	(Code 080)	(Code 081)
Motor Rotation	Clockwise	Counter Clockwise
Door Type	TX9300 Bi-Part, Left Hand Single Slide	TX9300 Right Hand Single Slide

If the door does not function correctly check the settings below with the FCP display. To check the settings enter the first two values (function code), the third flashing value (setting), if the setting value does not match value listed then change to the value shown below.

Example: Enter function code 63, if “1” is flashing then let the FCP time out and return to P display.

Example: Enter function code 63, if “0” is flashing then change to “1”, enter the value.

63 “1”	Input in4, D terminal pin 4,5- (1) = Operation mode MANUAL (FCP=P)	038
65 “2”	Input sf2, A terminal - (2) = Safety Closing 1 with reversing function	031
66 ”C”	Input sf3, B terminal - (C) = Safety Closing 2 with reversing function	031
67 ”C”	Input sf4, B terminal - (C) = Safety Closing 2 with reversing function	031

If any of the functions were changed then verify that the input LED /s are ON:
For in4 - Enter code 038
For sf1, sf2, sf3, sf4 -Enter code 031

Contact Tormax Technical support for troubleshooting assistance

TROUBLESHOOTING

Existing installations - Contact Tormax Technical support for troubleshooting assistance, factory reset is for extreme cases.

1. Factory Reset - Enter Code 041, (H11 = Operator Type not Defined)

FCP will display H11 = operator type not defined

2. Operator Type - Enter Code

Control Type	2301	2401
Program Code	011	012

FCP will display H14 until entire process is complete

3. Breakout function - Determine which input terminal the breakout beam or ON/OFF/HO switch is wired into. Input LED has to be illuminated before entering codes.

IN4, D terminal pins 4,5	631	038
sf4, B terminal pins 5,6	679	---

4. Safety Functions - Beams in A terminal and Overhead sensors. (i-One, Eagles, motion sensors) **No change needed.**

5. Safety Functions - Beams and overhead combination sensors.(7501, IXIO, i-oneX T) All safety devices should be setup for normally closed, all safety input LEDs ON. Enter Codes

65 “2”	Input sf2, A terminal - (2) = Safety Closing 1 with reversing function
66 ”C”	Input sf3, B terminal - (C) = Safety Closing 2 with reversing function
67 ”C”	Input sf4, B terminal - (C) = Safety Closing 2 with reversing function

6. Place FCP in P manual mode, manually open the door to the full open position.

7. Automatic Configuration - Enter Code

	Press SW2 for 1 Beep (Code 021)	Press SW2 for 2 Beep (Code 022)
Motor Rotation	Clockwise	Counter Clockwise
Door Type	Bi-Part, Left Hand Single Slide	Right Hand Single Slide

8. Place the FCP to Auto Mode and allow the door to fully close, H64 will display. Activate the door by momentarily pressing the SW2 button located on the control. Continue to activate the door with the SW2 button until the “H” learn codes clear and an audible beep tone. Maximum number of cycles 14.

9. Adjust additional functions such as hold open, closing speed, closing check speed... as shown on page 26.

AUTOMATIC CONFIGURATION

Automatic configuration consist of the following activities in programming:

SF1 - SF4	The contact type (NO or NC) and monitoring if applicable will be automatically detected. Make sure sensor zones are clear and not in detection.
Lock Unit MCU32-LOCU	The functioning Lock is automatically detected and set to default operation. See programming table for options.
Battery Unit MCU32-BATU	The functioning Battery back-up is recognized if connected.
Input / Output Module MCU32-INOU-A	The functioning I/O module is recognized and saved via the LIN Bus, if the module is connected and coded as module 1 or 2.
Functional Control Panel MCU32-USIN-7-A	The FCP is recognized and saved via the LIN Bus, if connected and coded (1 or 2). The FCP is detected immediately when connected to the LINE Bus input of control.
Power supply Module MCU32-PSUP-40-18-C MCU32-PSUP-40-36-A	The functioning power supply module is recognized and saved, if connected to the control at connector labeled Power Supply.
Reference Run	The door searches for the open and closed end stops, starting with an automatic closing command displaying H64. Activating the door control will start the opening cycle displaying H63. After travel distance is determined it is saved.
Door Dimensions	The doors width and weight are detected during the initial opening cycles for the purpose of calculating check speed & distance, opening & closing speeds and controller settings.

Automatic configuration process consists of cycling the door open and closed until all programming activities are complete. The learning process lasts for a maximum of 14 cycles. The FCP displays “H” codes as a visual aid through the process. When the learn process is complete an audible tone from control and “H” codes on FCP will stop being displayed.

PROGRAMMING TABLE

Most common parameters used are highlighted. * Indicates Default Value

Code		Function	Note
01	1	Door operator type iMotion 2301	
01	2	Door operator type iMotion 2401	
02	1	Automatic configuration: All Bi-Part, TX9200/ 9430 RH SS, TX9300/ 9420 LH SS	**(SW2: hold 1 Beep)** Contains 030...7, 07x, 08x
02	2	Automatic configuration: TX9200/ 9430 LH SS, TX9300/ 9420 RH SS	**(SW2: hold 2 Beeps)** Contains 030...7, 07x, 08x
03	0	--Detect and store reference way	
03	1	--Detecting and storing of safety facillities 1-4	**(SW2: hold 3 Beeps)** Safety inactive
03	2	--Detecting and storing MCU Lock Module 1	Only with code 572. Check coding on module.
03	3	--Detecting and storing of MCU Battery Module	
03	4	--Detecting and storing of MCU I/O- Module 1+2	Check coding on module
03	5	--Detecting and storing of MCU Power supply Module	
03	6	--Detecting and storing of Door mass	Display H65
03	7	--Detecting and storing of MCU User interface 2	Check coding on module
03	8	Terminal Module: Detecting, storing "in 1-4" (NO,NC,100Hz)	Pulse generators inactive
03	9	I/O Module 1: Detecting, storing of "in 1-4" (NO, NC)	Pulse generators inactive
04	0	Reset	Starts program with calibration run
04	1	Factory Reset	All adjustments back to default values (see *)
04	2	Firmware version	Example: r06_00 = V06.00
04	3	Number of cycles	Example: c10_302 = 10'302 cycles (max. 99?999?999)
04	4	Number of operating hours	Example: h4_002 = 4002 hours (max.99'999'999)
04	5	Delete fault protocol	
04	6	Address of control unit for network	Example: A1 = address no. 1
06	0 *	Control without FRW	FRW = Equipment for rescue and escape routes
06	1...8	Functions with FRW	
07	0...9	--Door mass	Automatic detection contained in 021 / 022
08	0...1 0*	--Rotating direction of drive	0 contained in 021 / 1 contained in 022
10	0...F	Hold-open time of activator in mode of op. AUTO1	

	0	1	2 *	3	4	5	6	7	8	9	A	b	C	d	E	F	code
	0	0.5	1	2	3	5	7.5	10	12.5	15	17.5	20	25	30	45	60	sec.

11	0...F	Hold-open time of activator in mode of op. AUTO2															
	0	1	2 *	3	4	5	6	7	8	9	A	b	C	d	E	F	code
	0	0.5	1	2	3	5	7.5	10	12.5	15	17.5	20	25	30	45	60	sec.
12	0...F	Hold-open time of key switch															
	0	1	2	3	4 *	5	6	7	8	9	A	b	C	d	E	F	code
	0	0.5	1	2	3	5	7.5	10	12.5	15	17.5	20	25	30	45	60	sec.
13	0...9	Delay time Mode of op. OFF															
	0	1	2 *	3	4	5	6	7	8	9							code
	1	3	5	7.5	10	15	20	30	45	60							sec.
14	0...9	Bell active time															0 = Duration identical to trigger duration
	0	1	2 *	3	4	5	6	7	8	9							code
	=imp	0.5	1	2	3	4	5	6	8	10							sec.
15	0...9	Bell intermission															
	0	1	2	3	4	5	6 *	7	8	9							code
	0	0.5	1	2	3	4	5	6	8	10							sec.
16	0...9	Stop time after safety															
	0	1	2 *	3	4	5	6	7	8	9							code
	0	0.5	1	2	3	4	5	6	8	10							sec.
17	0...9	Runtime Battery in mode of op. 2-6															Door opens after switch-off battery
	0	1	2	3 *	4	5	6	7	8	9							code
	10s	1	5	10	30	60	120	240	360	480							sec / min.

* = Default value when factory reset

PROGRAMMING TABLE

Most common parameters used are highlighted. * Indicates Default Value

Code		Function																Note
18	0...9	Runtime Battery in mode of op. OFF																
		0 *	1	2	3	4	5	6	7	8	9							code
		10s	1	5	10	30	60	120	240	360	480							sec / min.
19	0...9	Airlock timeout																0 = No timeout for airlock function
		0 *	1	2	3	4	5	6	7	8	9							code
		--	10	15	20	25	30	45	60	90	120							sec.
20	1...9	Opening speed																
		0	1	2	3	4	5	6 *	7	8	9							Code
		3.93	7.87	11.8	15.75	19.69	23.62	27.56	31.5	35.43	39.37							inches / s
21	0...9	Closing speed																
		0	1	2	3	4 *	5	6	7	8	9							Code
		3.15	6.3	9.45	12.6	15.75	18.9	22.05	25.2	28.35	31.5							inches / s
22	0...9	Close check speed																
		0	1	2	3 *	4	5	6	7	8	9							Code
		.59	.63	.71	.82	1	1.18	1.43	1.68	2.00	2.36							inches / s
26	0...9 2*	Braking distance opening																9 = max
28	0...9 4*	Braking distance closing																9 = max
30	0...9	Motor force opening																Net force on door edge
		0	1	2	3	4	5 *	6	7	8	9							code
		5	11	22	33	44	55	66	77	88	100							%
31	0...9	Motor force closing																Net force on door edge
		0	1	2	3	4	5 *	6	7	8	9							code
		5	11	22	33	44	55	66	77	88	100							%
33	0...9	Motor force closed position																Net force on door edge > reduce if H73 after 10s!
		0	1	2	3	4 *	5	6	7	8	9							code
		0	20	30	40	50	60	70	80	90	100							N
35	0...9 5*	Reversing sensitivity opening																9 = max
36	0...9 5*	Reversing sensitivity closing																9 = max
39	0...9 5*	Travel distance tolerances (60...300%)																
41	0...9	Opening width reduced																
		0	1	2	3	4	5	6 *	7	8	9							code
		10	20	30	40	50	60	70	80	90	100							%
51	0 *	Operating mode return to last setting on user interface																after terminal operating mode
51	1...6	Operating mode return to mode of op. ...																after terminal operating mode
		1	2	3	4	5	6											code
		OFF	AUT1	AUT2	EXIT	OPEN	MAN.											Mode of Operation
51	7	No operating mode return																after terminal operating mode
55	0 *	Locks in operating mode OFF																
55	1	Locks in operating mode OFF, EXIT																
55	2	Locks in operating mode OFF, AUTO 1+2, EXIT																
56	0 *	Unlocks never in case of power failure																
56	1	Unlocks in AUTO1, AUTO2, EXIT in case of power failure																
56	2	Unlocks in every operating mode in case of power failure																
57	0	Electric strike: current-free locked																
57	1	Electric strike: current-free unlocked																Only for electric strike with 100% duty ratio
57	2 *	Lock type "Lock unit 2301/2401", with autom. configuration																
57	3	Electric strike switch-on range 100%, until door is closed																Only for electric strike with 100% duty ratio
57	4	Lock type "STARLOCK", with autom. detection																With Lock Module LOCK-200-A
57	5	Lock type "89 TCP", with autom. detection																With Lock Module LOCK-200-A

* = Default value when factory reset

PROGRAMMING TABLE

Most common parameters used are highlighted. * Indicates Default Value

Code		Function																Note
58	0...9	Delay time to open																Independent adjustment only with skipper
		0 *	1	2	3	4	5	6	7	8	9							code
		0	0.2	0.4	0.8	1.2	1.6	2.0	2.5	3.0	4.0							sec.
59	0...6	Tension "pwm out" with connection to terminal 40V or 24V**																
		0	1	2	3	4 *	5	6										code
		6	9	12	15	24	12**	24**										V DC
60	0	in1: Operation mode OFF																Contact NO. NC detect with code 038
60	1	in1: Operation mode MANUAL																Contact NO. NC detect with code 038
60	2	in1: Operation mode OPEN																Contact NO. NC detect with code 038
60	3 *	in1: Activator inside																Contact NO. NC, 100Hz detect with code 038
60	4	in1: Activator outside																Contact NO. NC, 100Hz detect with code 038
60	5	in1: Key switch																Contact NO. NC, 100Hz detect with code 038
60	6	in1: Emergency opening except in OFF																Contact NO. NC, 100Hz detect with code 038
60	7	in1: Emergency opening in all modes of op.																Contact NO. NC, 100Hz detect with code 038
60	8	in1: Emergency closing (with locking)																Contact NO. NC, 100Hz detect with code 038
60	9	in1: Operation mode EXIT																Contact NO. NC detect with code 038
61	0...9 4*	in2: Same choice of functions as on "in1"																Contact type detect with code 038
62	0...9 5*	in3: Same choice of functions as on "in1"																Contact type detect with code 038
63	0...9 0*	in4: Same choice of functions as on "in1"																Contact type detect with code 038
64	0	sf1: Safety opening 1 with stop function																Type of connection NO,NC,test detect with code 031
64	1	sf1: Safety opening 1 with creeping function																Type of connection NO,NC,test detect with code 031
64	2 *	sf1: Safety closing 1 with reversing function																Type of connection NO,NC,test detect with code 031
64	3	sf1: Safety closing 1 with creeping function																Type of connection NO,NC,test detect with code 031
64	4	sf1: Safety swing area																Type of connection NO,NC,test detect with code 031
64	5	sf1: Safety stop																Type of connection NO,NC,test detect with code 031
64	6	sf1: Emergency opening except in OFF																Contact NO. NC detect with code 031
64	7	sf1: Emergency opening in all modes of op.																Contact NO. NC detect with code 031
64	8	sf1: Emergency closing (with locking)																Contact NO. NC detect with code 031
64	9	sf1: Mode of op. MANUAL / Break out																Contact NO. NC detect with code 031
64	A	sf1: Safety opening 2 with stop function																Type of connection NO,NC,test detect with code 031
64	b	sf1: Safety opening 2 with creeping function																Type of connection NO,NC,test detect with code 031
64	C	sf1: Safety closing 2 with reverse function																Type of connection NO,NC,test detect with code 031
64	d	sf1: Safety closing 2 with creeping function																Type of connection NO,NC,test detect with code 031
65	0...d C*	sf2: Same choice of functions as on "sf1"																Type of connection detect with code 031
66	0...d 0*	sf3: Same choice of functions as on "sf1"																Type of connection detect with code 031
67	0...d A*	sf4: Same choice of functions as on "sf1"																Type of connection detect with code 031
68	0	out1: Message "door closed"																
68	1	out1: Message “door closed and locked”																
68	2	out1: Message “door open”																
68	3	out1: Message “General fault”																
68	4 *	out1: Bell																
68	5	out1: Message “Mode of operation OFF”																
68	7	out1: Battery in service																
68	9	out1: Message “door is opening or open”																Function visible after 1 door-opening cycle
69	0...9 0*	out2: Same choice of functions as on "out1"																
70	0 *	I/O Module 1: in1: No function																
70	1	I/O Module 1: in1: Operating mode OFF																Contact NO. NC detect with code 039
70	2	I/O Module 1: in1: Operating mode AUTOMATIC 1																Contact NO. NC detect with code 039
70	3	I/O Module 1: in1: Operating mode AUTOMATIC 2																Contact NO. NC detect with code 039

* = Default value when factory reset

PROGRAMMING TABLE

Most common parameters used are highlighted. * Indicates Default Value

Code		Function	Note
70	4	I/O Module 1: in1: Operating mode EXIT	Contact NO. NC detect with code 039
70	5	I/O Module 1: in1: Operating mode OPEN	Contact NO. NC detect with code 039
70	6	I/O Module 1: in1: Operating mode MANUAL	Contact NO. NC detect with code 039
70	7	I/O Module 1: in1: Inhibit switch	Contact NO. NC detect with code 039
71	0...7 0*	I/O Module 1: in2: Same choice of functions as on I/O Module 1: in1	Contact NO. NC detect with code 039
72	0...7 0*	I/O Module 1: in3: Same choice of functions as on I/O Module 1: in1	Contact NO. NC detect with code 039
73	0...7 0*	I/O Module 1: in4: Same choice of functions as on I/O Module 1: in1	Contact NO. NC detect with code 039
74	0 *	I/O Module 1: out1: No function	
74	1	I/O Module 1: out1: Operating mode OFF	
74	2	I/O Module 1: out1: Operating mode AUTOMATIC 1	
74	3	I/O Module 1: out1: Operating mode AUTOMATIC 2	
74	4	I/O Module 1: out1: Operating mode EXIT	
74	5	I/O Module 1: out1: Operating mode OPEN	
74	6	I/O Module 1: out1: Operating mode MANUAL	
74	7	I/O Module 1: out1: "Door is opening"	
74	8	I/O Module 1: out1: “Door is opening or open”	
74	9	I/O Module 1: out1: "Door is closing"	
75	0...9 0*	I/O Module 1: out2: Same choice of functions as on I/O Module 1: out1	
76	0...9 0*	I/O Module 1: out3: Same choice of functions as on I/O Module 1: out1	
77	0...9 0*	I/O Module 1: out4: Same choice of functions as on I/O Module 1: out1	
78	0	User Interface 1: in1: No function	
78	1 *	User Interface 1: in1: User interface lock	Contact NO. Use User Interface from V1.07!
78	2	User Interface 1: in1: Operating mode OFF	Contact NO. Use User Interface from V1.07!
78	3	User Interface 1: in1: Operating mode AUTOMATIC 2	Contact NO. Use User Interface from V1.07!
78	4	User Interface 1: in1: Operating mode EXIT	Contact NO. Use User Interface from V1.07!
78	5	User Interface 1: in1: Operating mode OPEN	Contact NO. Use User Interface from V1.07!
78	6	User Interface 1: in1: Operating mode MANUAL	Contact NO. Use User Interface from V1.07!
78	7	User Interface 1: in1: Emergency closing	Contact NO. Use User Interface from V1.07!
78	8	User Interface 1: in1: Emergency opening in all op. modes	Contact NO. Use User Interface from V1.07!
78	9	User Interface 1: in1: Key switch	Contact NO. Use User Interface from V1.07!
79	0...9 0*	User Interface 1: in2: Same choice as on User Interface 1: in1	Contact NO. Use User Interface from V1.07!
80	0 *	Bell trigger: Safety closing 1	
80	1	Bell trigger: Safety closing 2	
80	2	Bell trigger: Activator inside	
80	3	Bell trigger: Activator outside	
80	4	Bell trigger: Key switch	
82	0 *	No step-by-step control	
82	1	Step-by-step control only for key switch	
82	2	Step-by-step control only for activator inside and outside	
82	3	Step-by-step control for activator inside, outside and key switch	
84	0 *	No emergency opening with MCU32-MBTU	
84	1	Emergency opening with MBTU, Type A, with direct opening	Application see T-1705
84	2	Emergency opening with MBTU, Type B, with cycle operation and opening	Application see T-1705
85	0 *	No airlock function	
85	1	Airlock function for inner door	Application see T-1304
85	2	Airlock function for outer door	Application see T-1304

* = Default value when factory reset

TROUBLE SHOOTING CODES

* E = Error | H = Hint

* No.	Fault	Reaction System	Reset
E00	Firmware incompatible to MCU version /D	Safety operating mode or only display	Reset, new version MCU32-BASE
E0x	Internal test negative	Safety operating mode or only display	Reset
E11	MCU Lock 1, wrong position	Door cannot open	Automatically if OK
E20	LIN to Monit. battery mod. MBAT interrupted	-	Reset
E21	LIN to User Interface 1 USIN interrupted	Last mode of operation remains	Automatically if OK
E22	LIN to User Interface 2 USIN interrupted	Last mode of operation remains	Automatically if OK
E23	LIN to s I/O-Modul 1 INOU interrupted	Programmed function will be inactive	Automatically if OK
E24	LIN to s I/O-Modul 2 INOU interrupted	Programmed function will be inactive	Automatically if OK
E25	LIN to Lock Unit 1 LOCU interrupted	Last status remains	Automatically if OK
E26	LIN to Lock Unit 2 LOCU interrupted	Last status remains	Automatically if OK
E29	LIN to Power Supply PSUP-40-36 interrupted	Last status remains	Automatically if OK
E30	Safety clos. creep 2 >1min. active,test neg.	According safety function	Automatically if OK
E31	Safety open 1 >1min. active, test neg.	According safety function	Automatically if OK
E32	Safety op. creep 1 >1min. active, test neg.	According safety function	Automatically if OK
E33	Safety closing 1 >1min. active, test neg.	According safety function	Automatically if OK
E34	Safety clos. creep 1 >1min. active,test neg.	According safety function	Automatically if OK
E35	Safety swing area >1min. active, test neg.	According safety function	Automatically if OK
E36	Safety stop >1min. active, test neg.	According safety function	Automatically if OK
E37	Safety open 2 >1min. active, test neg.	According safety function	Automatically if OK
E38	Safety op. creep 2 >1min. active, test neg.	According safety function	Automatically if OK
E39	Safety closing 2 >1min. active, test neg.	According safety function	Automatically if OK
E40	User-defined input > 1min. active	(Door remains open)	Automatically if OK
E41	Activator inside > 1min. active	Door remains open	Automatically if OK
E42	Activator outside > 1min. active	Door remains open	Automatically if OK
E43	Key switch > 1min. active	Door remains open	Automatically if OK
E46	Emergency open >10min. active	Door remains open	Automatically if OK
E47	Emergency close >10min. active	Door closes and remains closed	Automatically if OK.
E48	Wake up or Push button SW2 > 1min. active	Door remains open	Automatically if OK.
E49	Inhibit switch> 1min. active	Door stand still	Automatically if OK.
E51	Encoder not working	Safety operating mode	Automatic Reset / Reset
E53	Calibration run different from reference	Safety operating mode	Reset
E54	Driveway in op. longer than reference	Safety operating mode	Reset >automatic configuration
E55	Position drift >9mm, toth belt jumping	Only display, auto-correction stops	Automatically if OK / Reset
E56	Door blocked	Saftey operation mode	Reset
E61	Voltage 40V outside of admissible range	Safety operating mode	Automatically if OK
E62	Power Supply 24V (Limit U, I)	Safety op. mode	Automatically if OK
E63	Current in power supply 40V to high	Safety operating mode	Automatically if OK
E64	Motor temperature > 90 ° C, cable interrupted	Safety operating mode	Automatically after cooling down
E65	Control end stage > 100 ° C	Safety operating mode	Automatically after cooling down
E66	Motor control faulty in MCU32-BASE	Safety operating mode	Reset
E67	Motor current to high in long-term	Normal operation	Automatically if OK
E72	Battery Unit MBTU: Charge < 15%	Normal operation	Automatically if OK
E73	Battery Unit MBTU faulty (MBAT or accu)	Normal operation	Reset or disconnect power supply
E8x	Memory or processor test negative	Safety operating mode	Reset
H11	Operator type not defined	Safety operating mode	Program operator type
H14	Automatic configuration not executed	Safety operating mode	Program 021 or 022
H61	Calibration run in opening direction	Searches open position	At the end of movement
H62	Calibration run in closing direction	Searches closed position	At the end of movement
H63	Reference run opening	Measures reference run length	At the end of movement
H64	Reference run closing	Searches closed position	At the end of movement
H65	Learn mode (Weight detection)	Normal operation	After 3-12 opening cycles
H71	Battery mode	Door moves slowly	Power supply return
H73	Motor current in closed position to high	Normal operation	Reset, reduce 33x
H91	Obstacle detection at opening	Door reverses	Automatically, Display 20s.
H92	Obstacle detected at closing	Door reverses	Automatically, Display 20s.
H93	Permanent obstacle at opening	Reset after 5 reversings	Automatically, Display 20s.
H94	Permanent obstacle at closing	Reset after 5 reversings	Automatically, Display 20s

CONTROL CONNECTION DIAGRAM

Function	Control Input	Control Terminals	Code
Inside Activation	Input 1	C1, C2	603
Outside Activation*	Input 2	C4, C5	614
Key Switch**	Input 3	D1, D2	625
Breakout Mode (P)***	Input 4	D4, D5	631
Safety Closing w/ Reversing 1	sf1	A1, A2	642
Safety Closing w/ Reversing 1***	sf2	A5, A6	652
Safety Closing w/ Reversing 2***	sf3	B1, B2	66C
Safety Closing w/ Reversing 2***	sf4	B5, B6	67C
Aux. Lock Output****	PWM	E1, E2	-
Bell	Out 1	E3, E4	684
Door Closed	Out 2	E5, E6	690

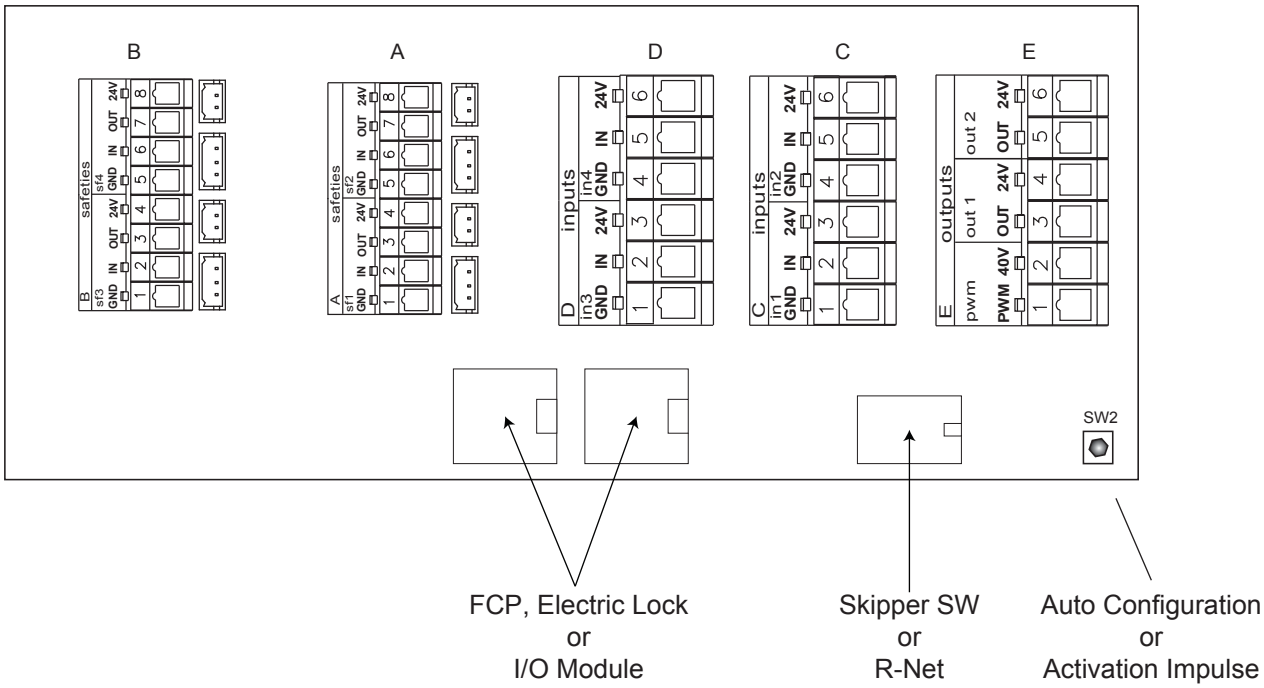

* Functions as a reactivation input when door is One-Way / Exit Mode of operation.
** Activate the door in all modes of operation except in P/ Parked/ Manual/ Breakout.
*** The code changes with a factory reset, code will need to be re-entered.
**** Used as Lock output for swing door applications.

Power Output to Sensors is .75 A max (For 2301 Standard Door Drive).
Power Output to Sensors is 1.5 A max (For 2401 Heavy Duty Door Drive)

CONNECTION DIAGRAM

BEA IXIO -DT1 sensors with Doorway Holding Beams

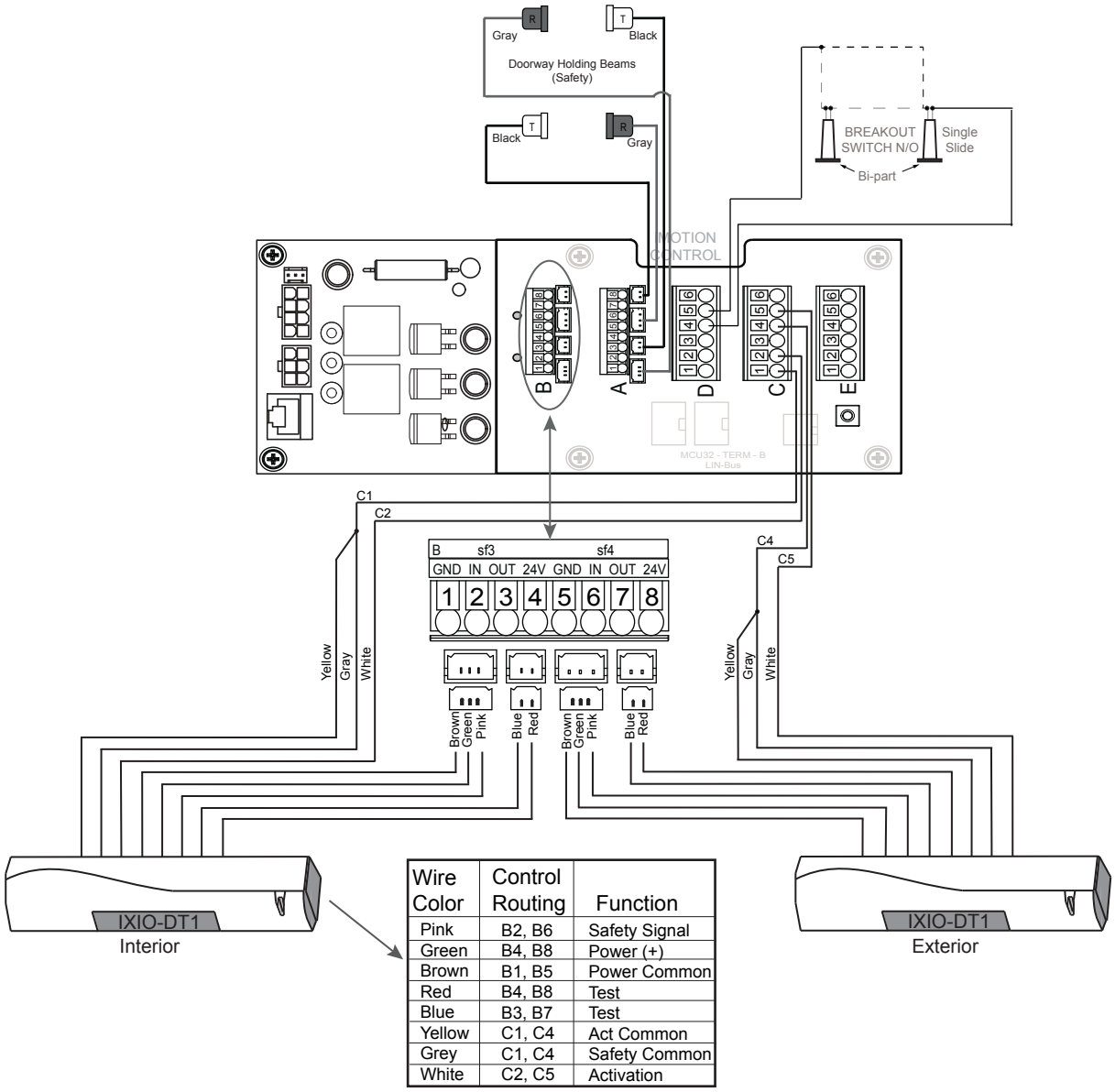

Wire Color	Control Routing	Function
Pink	B2, B6	Safety Signal
Green	B4, B8	Power (+)
Brown	B1, B5	Power Common
Red	B4, B8	Test
Blue	B3, B7	Test
Yellow	C1, C4	Act Common
Grey	C1, C4	Safety Common
White	C2, C5	Activation

Configure the IXIO sensor as as indicated below:

1. AIR: OUTPUT = NC
2. TEST = ON

Adjusted sensors to comply with current ANSI A156.10 standard. Refer to BEA IXIO User Guide to set up and adjust sensor.

CONNECTION DIAGRAM

i-OneXT sensors with Doorway Holding Beams

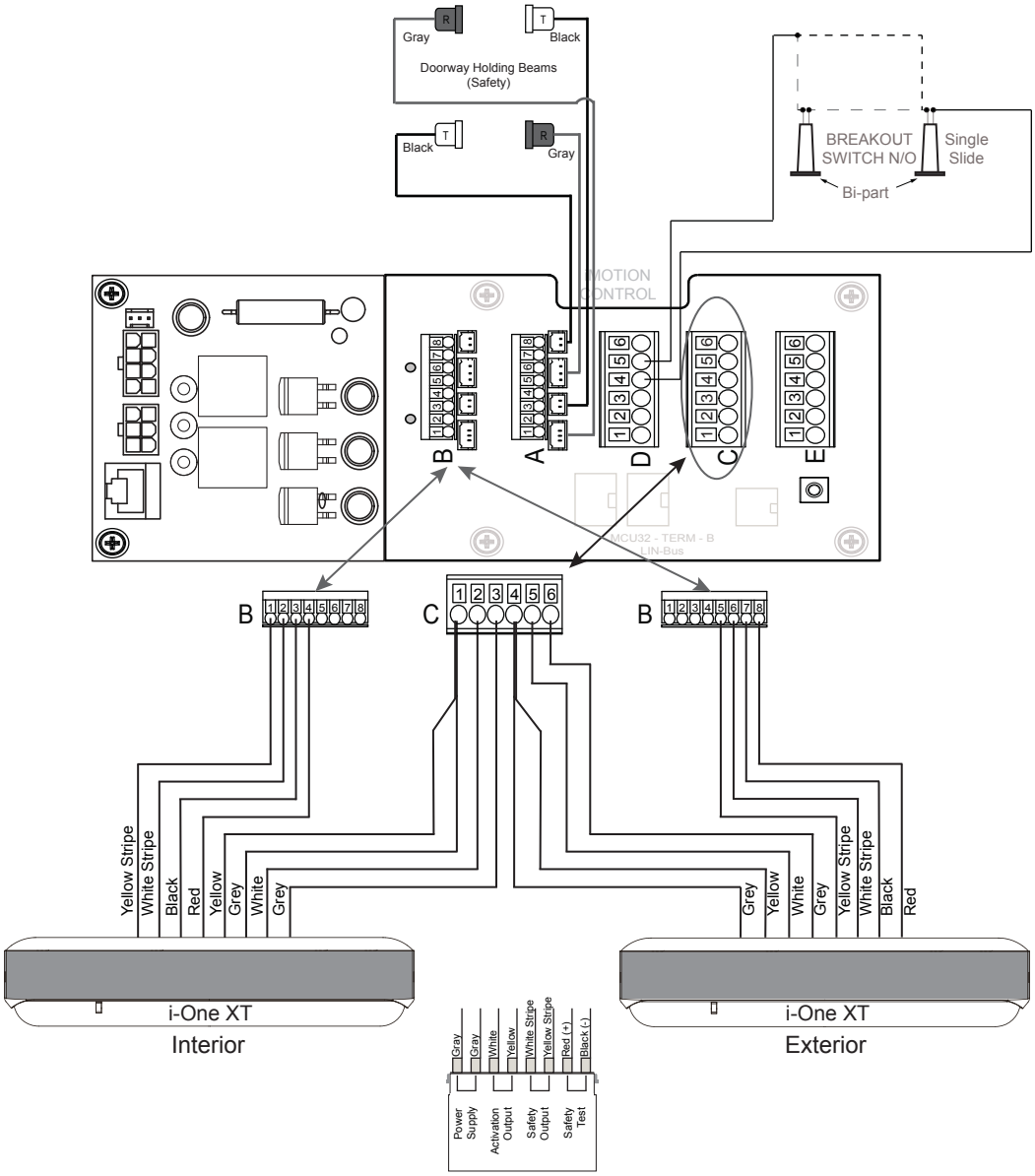

Configure the i-OneXT sensor as indicated below:

1. Simultaneous Output dipswitch 14 ↓ = OFF
2. Safety Output dipswitch 15 ↑ = NC
2. Test Input dipswitch 16 ↑ = Low

Adjusted sensors to comply with current ANSI A156.10 standard. Refer to Optex i-One XT User Guide to set up and adjust sensor.

CONNECTION DIAGRAM

Delta III/ 7501 sensors with Doorway Holding Beams

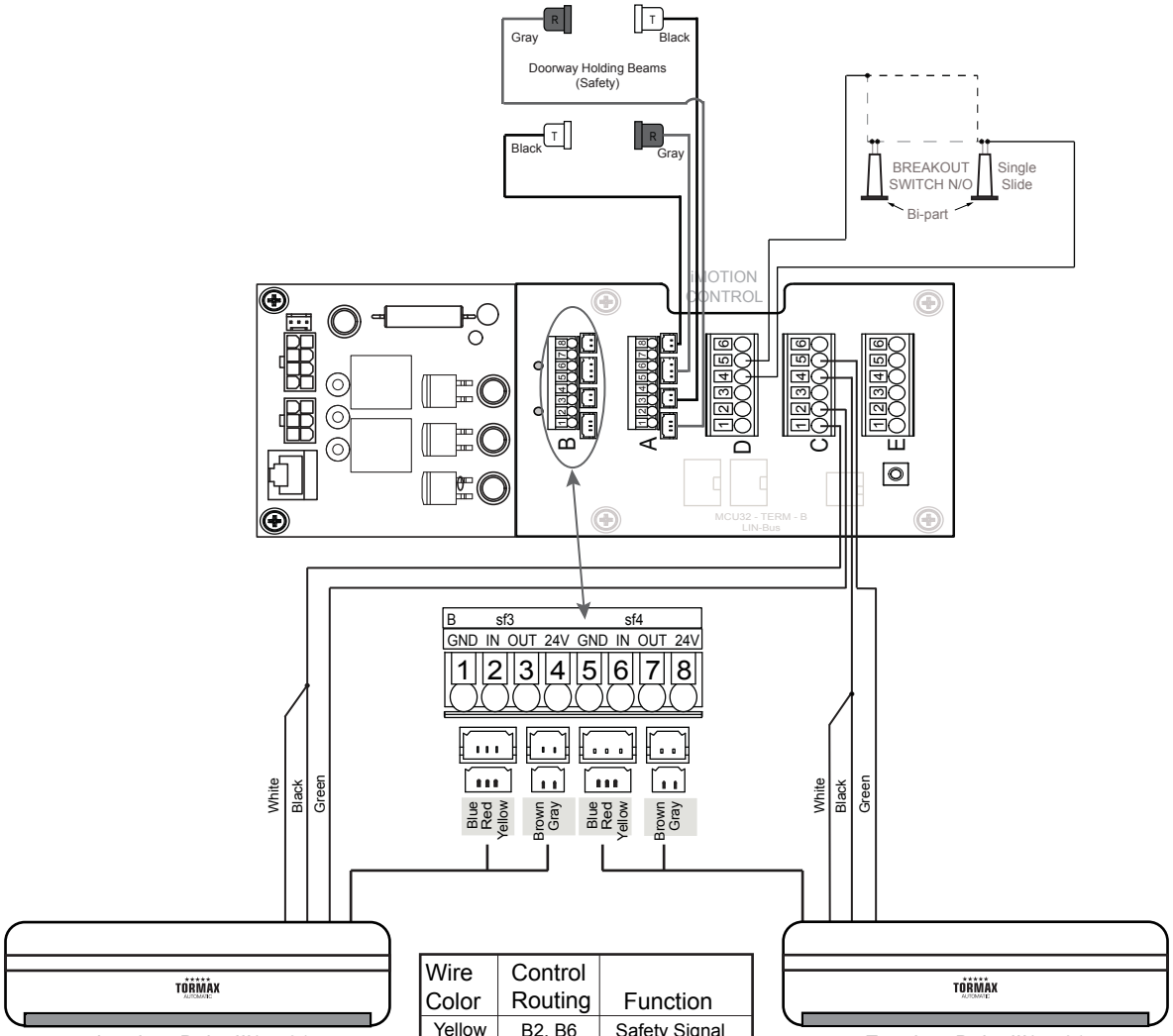

Interior - Delta III/ 7501

Exterior - Delta III/ 7501

Wire Color	Control Routing	Function
Yellow	B2, B6	Safety Signal
Red	B4, B8	Power (+)
Blue	B1, B5	Power Common
Gray	B4, B8	Test
Brown	B3, B7	Test
White	C1, C4	Act Common
Black	C1, C4	Safety Common
Green	C2, C5	Activation

Confirm the Delta III/ 7501 sensor default values, as the sensor is configured for:

1. Presence Timer dipswitch X1⬇X2⬆= 30 seconds
2. Safety Relay Output dipswitch X7⬇= NC
3. Door Learn dipswitch Y5⬆= OFF
4. Test Input dipswitch Y6⬇= ON

Adjusted sensors to comply with current ANSI A156.10 standard. Refer to Tormax T1781 tus User Guide to set up and adjust sensor.

ACCESSORY SWITCH WIRING

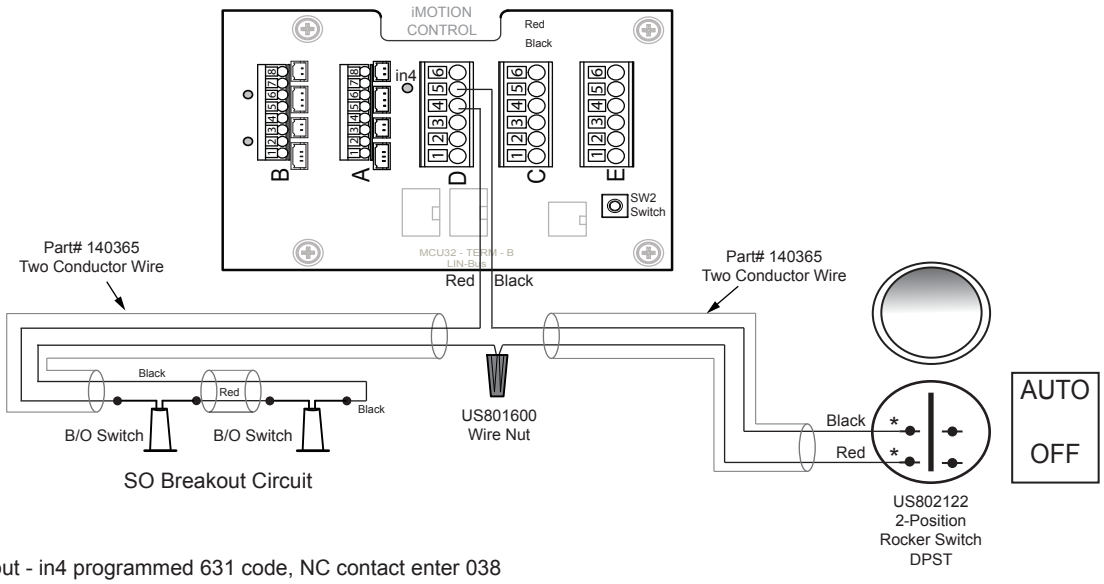

Input - in4 programmed 631 code, NC contact enter 038

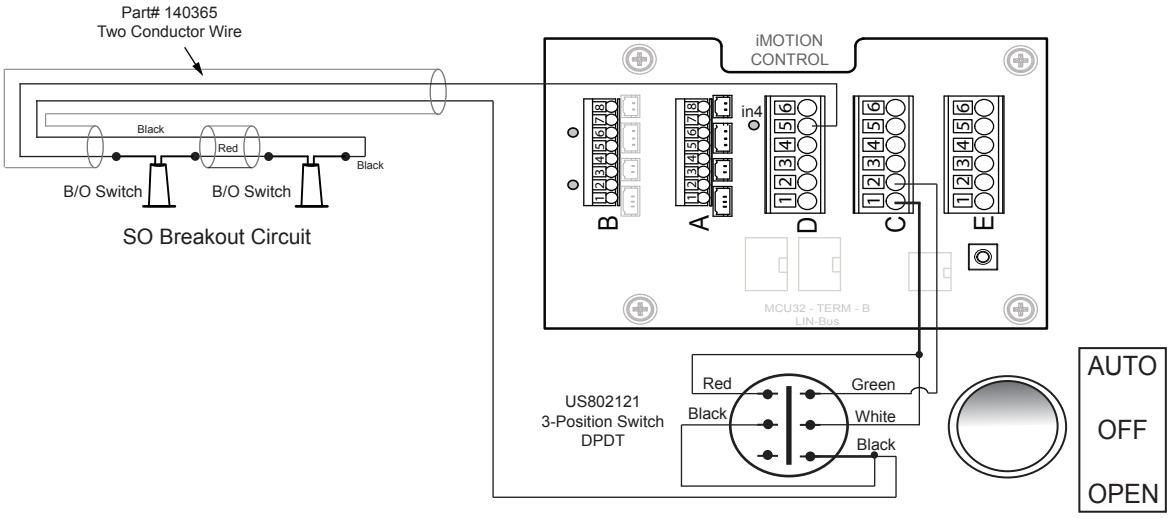

Input - in4 programmed 631 code, NC contact enter 038

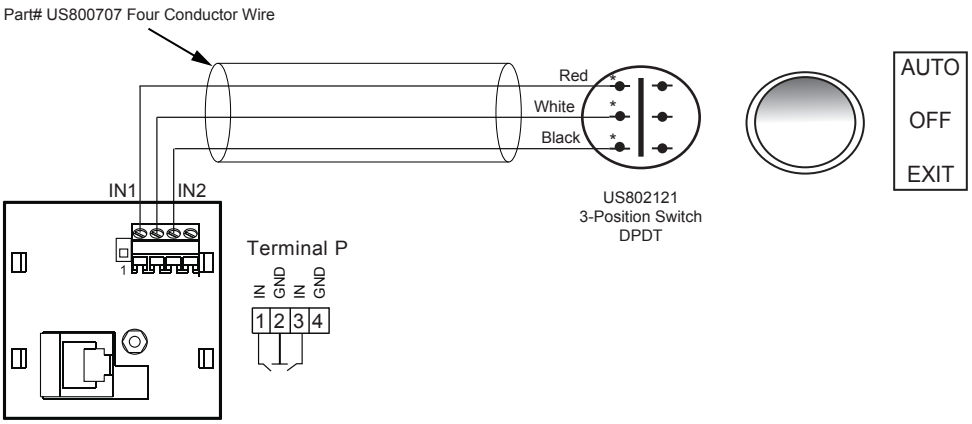

User Interface/ FCP Input IN1 (terminals P1,P2) should be programmed for 784 (EXIT)
User Interface/ FCP Input IN2 (terminals P3,P4) should be programmed for 793 (AUTO 2)
Program Automatic 2 opening width to 419

ANSI/ BHMA A156.10

These instructions are for informational purposes, refer to the current version of ANSI/ BHMA A156.10 “American National for Power Operated Pedestrian Doors” standard.

Sliding door systems must be installed, adjusted and inspected for compliance with ANSI/ BHMA.

Important aspects of the installation:

Control mat

- Size of active area and sensitivity.
- Mat Layout/ placement.
- Joining of control mats, trim height.

Sensors

- Pattern size and sensitivity.
- Layout/ placement and location.
- Functionality (Activation, Safety).

Knowing Act

Doors activated by a manual switch must have the switch installed in a location from which the operation of the door can be observed by the person operating the switch. Refer to the latest revision of ANSI/ BHMA A156.10 for specific details for sensor function, time delay and location of Knowing Act switch.

Entrapment

- Closing Speed is one foot per second maximum.
- Break away device(emergency egress) no more than 50 lbf (222 N).
- Closing force no more than 30 lbf (133 N).
- Time delay 1.5 seconds minimum.

Signage

Refer to ANSI/ BHMA for requirements and location.

ANSI/ BHMA A156.10 - SENSOR WALK TEST

The walk test should be performed by an AAADM certified inspector to ensure compliance with the ANSI A156.10 standard. Do not leave a door in non-compliance, contact TORMAX or the sensor manufacturer for assistance.

The illustrations show sensor patterns on one side of the door for simplicity, patterns exist on both sides of the door. Drawings not to scale.

1) Perform walk test on each side of the door checking sensor pattern size, sensitivity and function of all sensors to ensure conformance with ANSI/ BHMA standard.

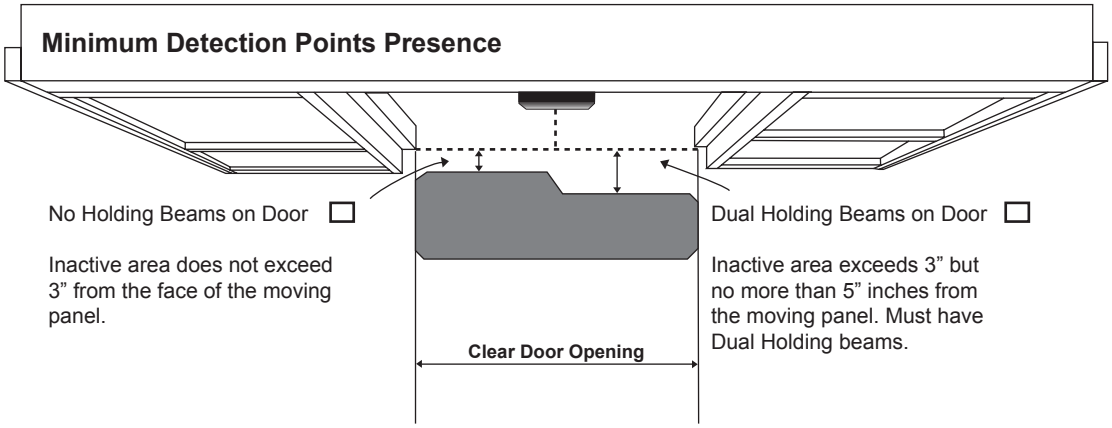

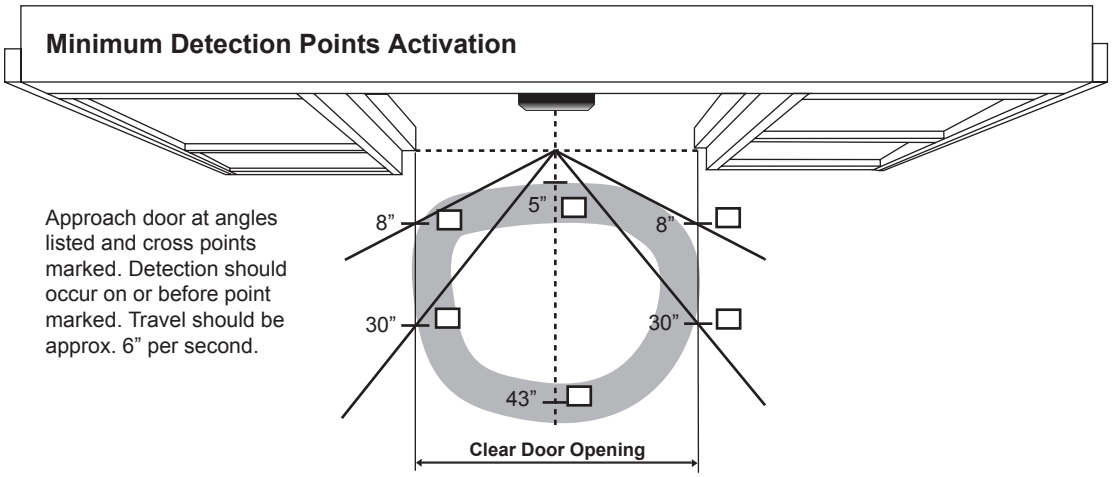

Passed **Failed** **Initially failed, then passed after adjustment**

FINAL CHECKLIST

Y	N	N/A	
☐	☐	☐	Do the doors slide freely, no binding/dragging?
☐	☐	☐	Are all wires clear from moving parts?
☐	☐	☐	Are all adjustment bolts tight including anti-risers?
☐	☐	☐	Do the break out panels function properly with no obstructions?
☐	☐	☐	Is the breakout switch functioning? (TX9300 & TX9430)
☐	☐	☐	Are there any fault codes flashing on the FCP?
☐	☐	☐	Are all modes on the FCP operating correctly (Off, Auto, Red, Open, Exit, Hold)?
☐	☐	☐	Are the holding beams operating correctly (if equipped)?
☐	☐	☐	Is the lock (electrical or mechanical) functioning properly?
☐	☐	☐	Has an ANSI A156.10 inspection been completed?
☐	☐	☐	Are the Door# decal, Service decal, Daily Safety Check decal all present and in proper location?
☐	☐	☐	Has the Daily Safety Check been reviewed with the Manager?
☐	☐	☐	Have all the FCP functions been reviewed with the Manager?
☐	☐	☐	Was the Owners Manual given to the Manager?
☐	☐	☐	Did the Manager sign the work order/service ticket?

Installer signature/date _____

T-1258 e	Technical Data	★★★★★ TORMAX AUTOMATIC 12859 Wetmore Road San Antonio, TX 78247 1-888-685-3707 WWW.TORMAXUSA.COM
Area of application	**iMotion 2301 & 2401 Slide Door Drive**	
Release	November 2009	
Use	Technical Specification	

Door Operator Type iMotion 2301 & 2401 Slide Door Drive

Drive System Electromechanical slide door operator with direct drive through AC permanent magnet synchronous motor with external rotor

Control System iMotion MCU32

Mains Connection 1 x 230 / 1 x 115 V AC, 50 – 60 Hz, 10 A

Power Consuption Max. 190 W (For 2301 Slide Door Drive)
Max. 310 W (For 2401 Slide Door Drive)

Sensor Power Supply 24 V DC (+0.5 – 1.5 V) 0.75 A (For 2301 Slide Door Drive)
24 V DC (+0.5 – 1.5 V) 1.5 A (For 2401 Slide Door Drive)
in battery operation min. 16.5 V

Protective Class of Drive IP 22

Ambient Temperature –4 °F to +122 °F

Outputs 24 V DC short circuit proof (within power supply 0.75 A in total) For 2301 Slide Door Drive
24 V DC short circuit proof (within power supply 1.5 A in total) For 2401 Slide Door Drive

CE Approval CE inkl. RoHS, TÜV, ETL

Standards DIN 18650, EN 60335-1, EN 61000-6-2, EN 61000-6-3,
UL 325
Note : iMotion 2401 is a category A drive. It may cause radio interferences in living areas. In this case the user can ask for suitable measures

Durability Class 3 according to DIN 18650-1 Dec. 2005
1,000,000 test cycles with 4,000 cycles per day

For 2301 & 2401 Slide Door Drives

	PACKAGE WIDTH (foot)	MAXIMUM DOOR WEIGHT (LBS) 2301	MAXIMUM DOOR WEIGHT (LBS) 2401
SINGLE SLIDE	7’ - 9’	265 lbs	530 lbs
BI - PART	10’ - 14’	220 lbs	440 lbs
TELESCOPIC SINGLE SLIDE	7’ - 9’	176 lbs	265 lbs
TELESCOPIC BI - PART	10’ - 14’	132 lbs	220 lbs
For larger package width Contact Tormax			

Opening speed 3.9 in/s – 39.4 in/s

Closing speed 3.9in/s – 39.4 in/s

Force at the tooth belt 18.4 - 250 Foot Pounds (For 2301 Slide Door Drive)
29.5 - 295 Foot pounds (For 2401 Slide Door Drive)

T-1277 e	Cable Plan	TORMAX AUTOMATIC 12859 Wetmore Road San Antonio,Tx 78247 1-888-685-3707 www.tormaxusa.com
Area of application	**iMotion 2301 & 2401 Slide Door Drive**	
Release	Jan. 2009	
Use	Wiring Specifications	

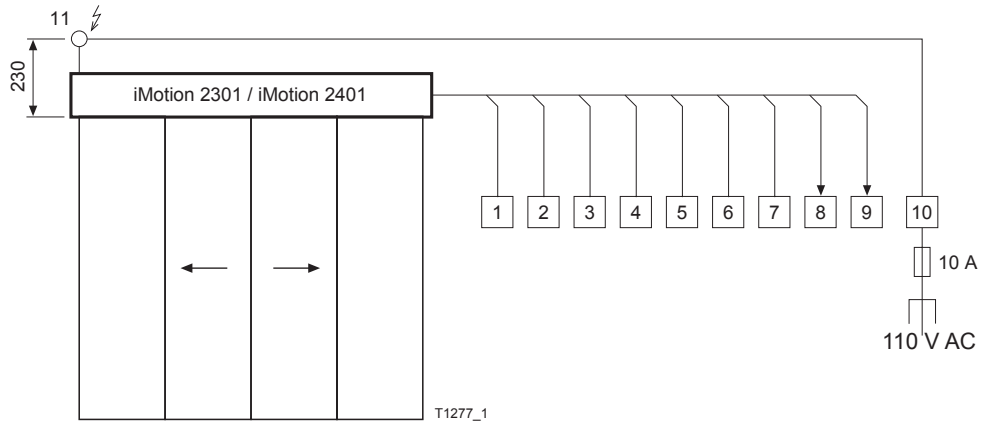

No.	Control Cables	Notes	Cable	Length (ft) without screen	Length (ft) with screen
1	Activator/Push-button inside	Stranded wire recommended	4 × 20 AWG	< 95	< 328
2	Activator/Push-button outside	Stranded wire recommended	4 × 20 AWG	< 95	< 328
3	Key-switch	Stranded wire recommended	2 × 20 AWG	< 95	< 328
4	User interface iMotion connected with FCC-connector		Phone ribbon cable 6 x 26 AWG RJ12, 6P6C	< 95	
	User interface iMotion connected with LIN-Adapter		3 × 23 AWG	< 95	< 328
5	Input	Stranded wire recommended	… × 20 AWG	< 95	< 328
6	…		… × 20 AWG	< 95	< 328
7	…		… × 20 AWG	< 95	< 328
8	Message 1 …	Stranded wire recommended	2 × 20 AWG	< 95	< 328
9	Message 2 …	Stranded wire recommended	2 × 20 AWG	< 95	< 328
10	Mains main switch	Stranded wire recommended	3 × 20 AWG		
11	Mains socket	Stranded wire recommended			

T-1259 e	Module Documentation Control Unit MCU32-CONU-85-18-A	TORMAX AUTOMATIC 12859 Wetmore Road San Antonio, TX 78247 1-888-685-3707 WWW.TORMAXUSA.COM
Area of application	**iMotion 2301 and 2401 Slide Door Drives**	
Release	November 2009	
Use	Installation and Maintainence	

Purpose

To manage the functions of control system for iMotion 2301 standard and 2401 Heavy duty door door drives

Function

The control unit contains all the necessary control system components for the operation of a sliding door system. It provides the connections and the power supply for the control panel, lock unit, motor unit, battery unit and input / output module.
The system configuration is performed through either the control panel MCU32-USIN or through the service software iMotion.

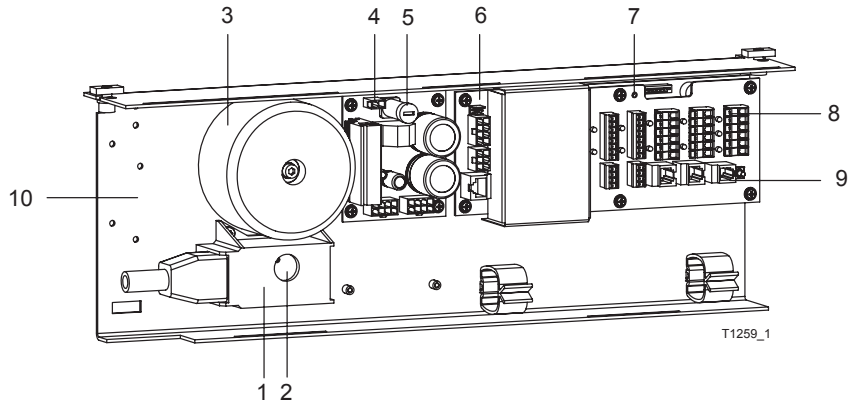

1 Power supply MCU32-FLTR-B
2 Voltage selector 230 / 115 VAC
3 Transformer MCU32-TRAF-29-85-A
4 Power supply module MCU32-PSUP-40-18-C
5 Fuse 5AT
6 Base module MCU32-BASE-40-200-A
7 Display power supply 24 V / 5 V
8 Terminal module MCU32-TERM-B
9 Push-button for opening impulse
10 Space for installation of 1 input/output module or 1 relay module

Module Connections

Connectors and terminals may only be connected in the current-free state.

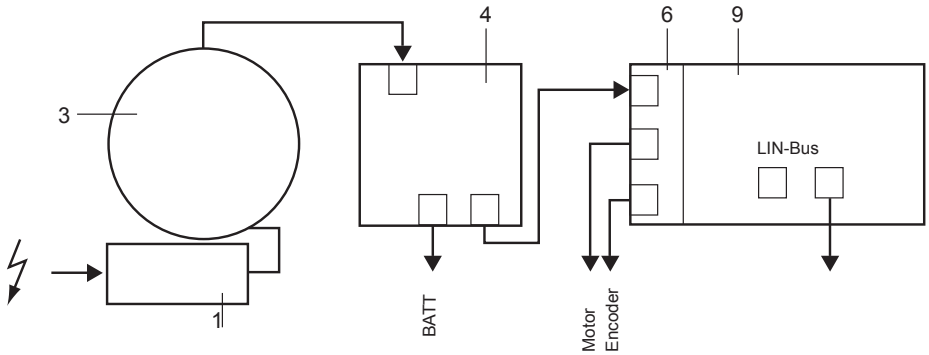

Commissioning

See T-1272.

Component Dimensions

2301 Standard Door Drive

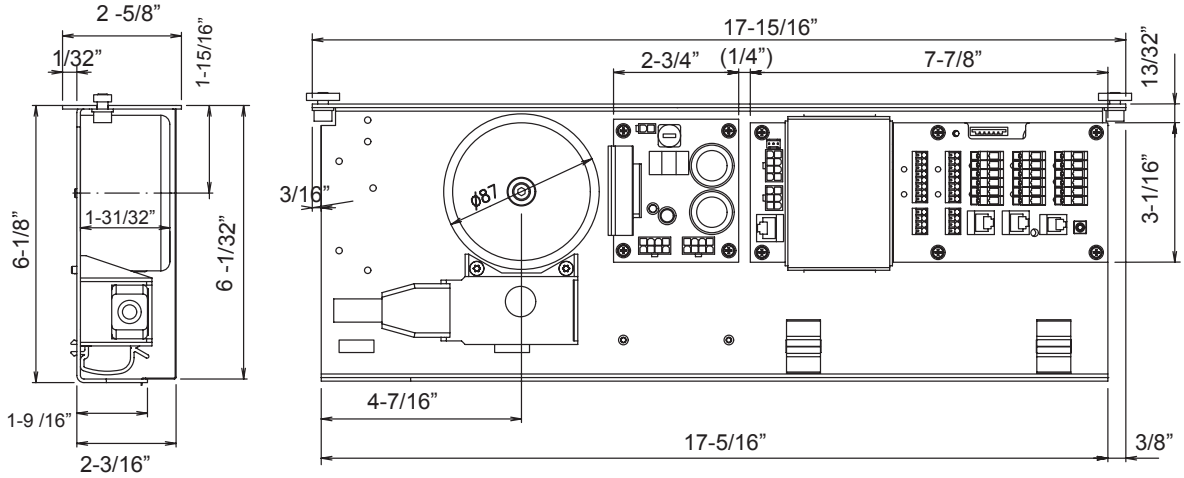

2401 Standard Door Drive

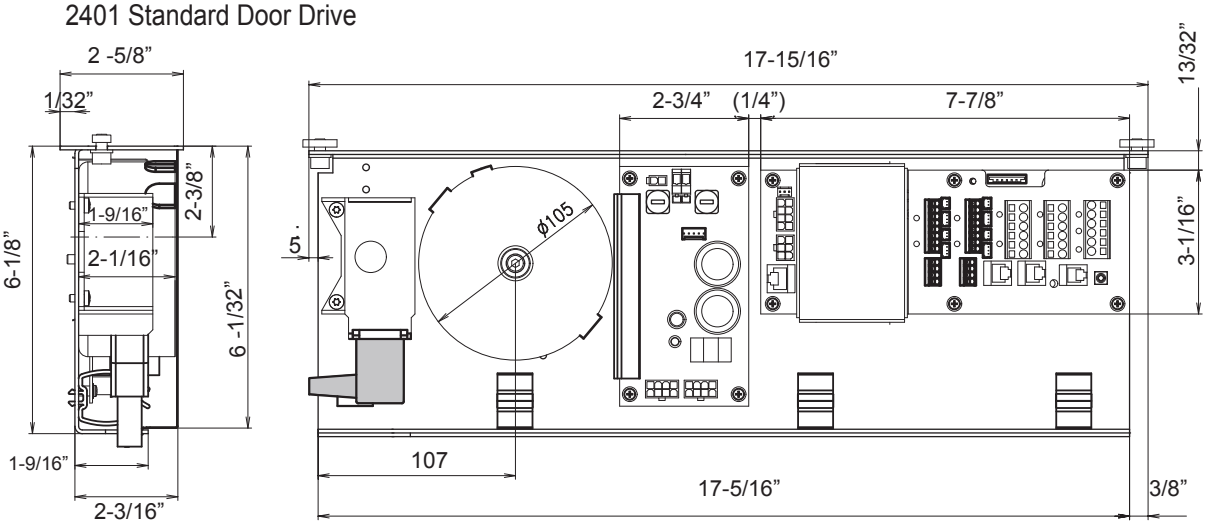

Technical Data

	2301	2401
Mains connection:	115 / 230 V AC, 50-60 Hz	115 / 230 V AC, 50-60 Hz
Power consumption:	8 ... 190 W	8 ... 310 W
Power supply sensors:	24 V DC / 0.75 A	24 V DC / 1.5 A
Ambient temperature:	- 4°F to + 122°F	- 4°F to + 122°F
Module interfaces:	Motor unit MCU32-MOTU-40-6-A Battery unit MCU32-BATU-24-1-B LIN bus for lock unit MCU32-LOCU-40-7-B LIN bus for input/output module MCU32-INOU-A LIN bus for operating unit MCU32-USIN-7-A RS232 for service software iMotion Config Card MCU32-CONF-...	Motor unit MCU32-MOTU-40-10-A Battery unit MCU32-BATU-24-1-B LIN bus for lock unit MCU32-LOCU-40-7-B LIN bus for input/output module MCU32-INOU-A LIN bus for operating unit MCU32-USIN-7-A RS232 for service software iMotion Config Card MCU32-CONF-...

T-1274 e	**Module Documentation** **Motor Unit MCU32-MOTU-40-6-A**	TORMAX AUTOMATIC 12859 Wetmore Road San Antonio, TX 78247 1-888-685-3707 WWW.TORMAXUSA.COM
Area of application	iMotion 2301 & 2401 Slide Door Drive	
Release	March 2008	
Use	Installation and Maintainence	

Purpose

This motor unit is design for 2301 standard and 2401 Heavy duty door drives.

Functional Principle

The motor unit includes MCU32-MOTR-40-6-A (1) (for standard door drive), MCU32-MOTR-40-10-A (1) (for heavy duty drive) with encoder module MCU32-ENCO-24-16-A (5) and brake module MCU32-BRAK-40-3-A (3).

The synchronous motor is attached with permanent magnet and external rotor, which drives the toothbelt directly. The encoder module rotates the motor and determines the door position.The brake module limits the door speed on power interruption or when the motor unit is disconnected from the control module.

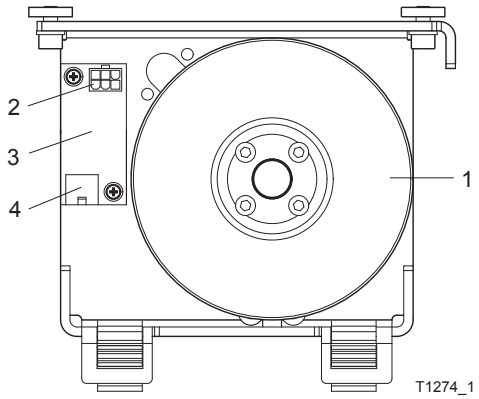

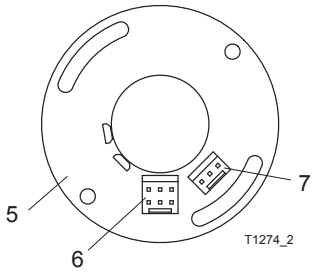

1 Motor
2 Connector MO
3 Brake module
4 Connector M
5 Encoder module
6 Connector ENC
7 Connector POT

Installation

- Connect the motor unit with the base module using the prefabricated motor and encoder cables as shown

Connection Diagram

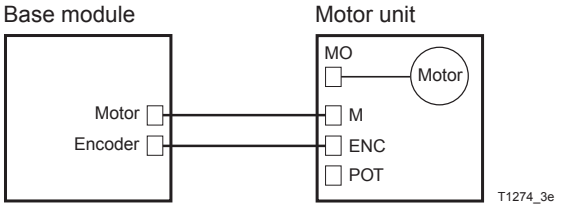

Commissioning

Programming using FCP use T-1272 e

Component Dimensions

2301 Standard Door Drive

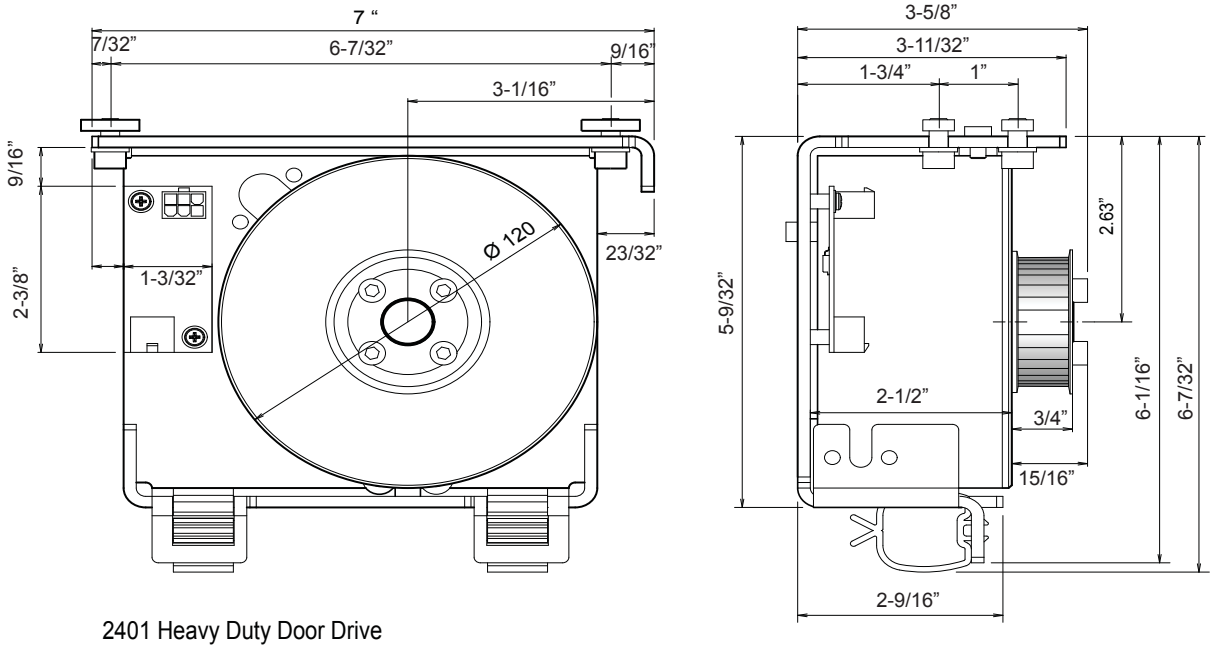

2401 Heavy Duty Door Drive

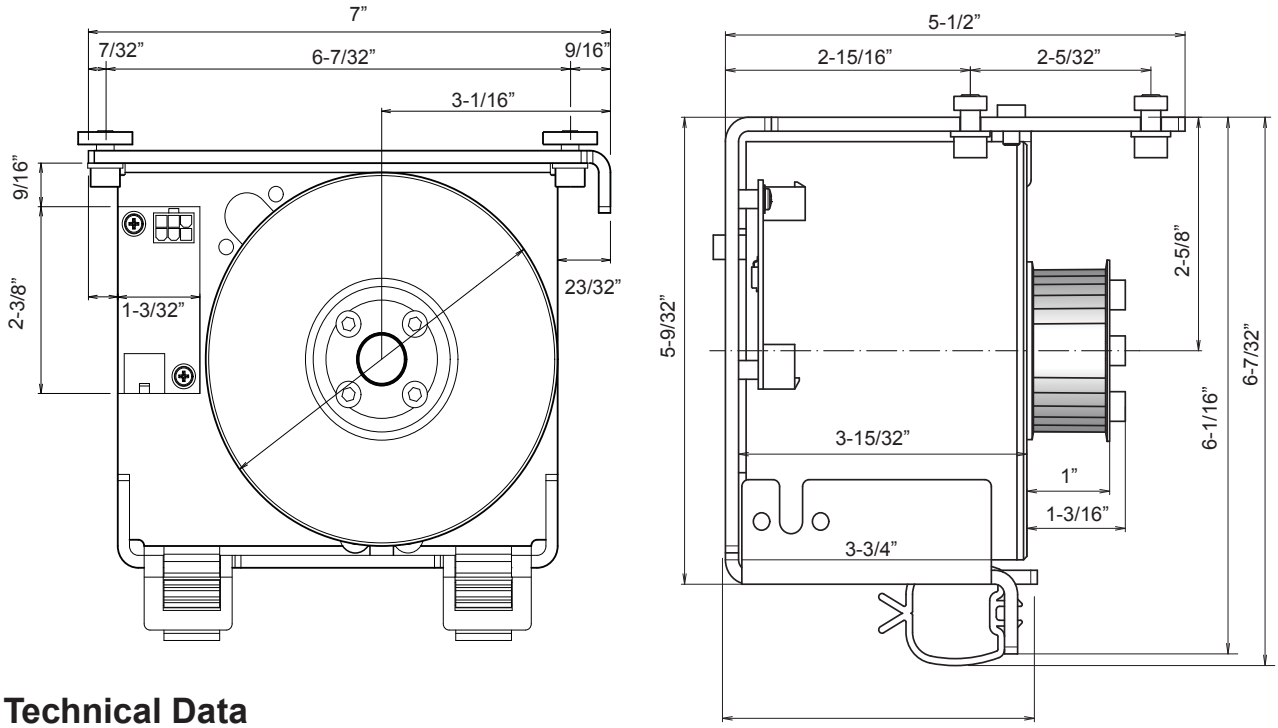

Technical Data

	2301	2401
Rated voltage	17 V Y	22 V Y
Maximum current	10 A (S3)	10 A (S3)
Torque	4.4 Foot Pounds (S3)	7.3 Foot Pounds (S3)
Ambient temperature	–4° F … +122° F	–4° F … +122° F
Overtemperature protection	194° F	248° F
Interfaces	MCU32-BASE-40-200-A	MCU32-BASE-40-200-A
Toothbelt	9/16”	25/32”
Toothbelt module	3/16”	3/16”

T-1265 e	Module Documentation Lock Unit MCU32-LOCU-40-7-B	★★★★★ TORMAX AUTOMATIC 12859 Wetmore Road San Antonio,Tx 78247 1-888-685-3707 www.tormaxusa.com
Area of application	iMotion 2301, 2401 Slide Door Drive	
Release	September 2009	
Use	Installation and Maintainence	

Purpose

This lock unit is design for 2301 and 2401 slide door drives.It positively locks each SX or X panel.

Functional Principle

The lock unit includes lock module MCU32-LOCK-40-7-B(1)
The lock unit recieves control commands for locking and unlocking via LIN bus (2) from the base module .

The operating function depends on the programming of the basic control system. For individual functions see programming table.

1) Lock module MCU32-LOCK-40-7-B
2) LIN-Bus
3) Code switch

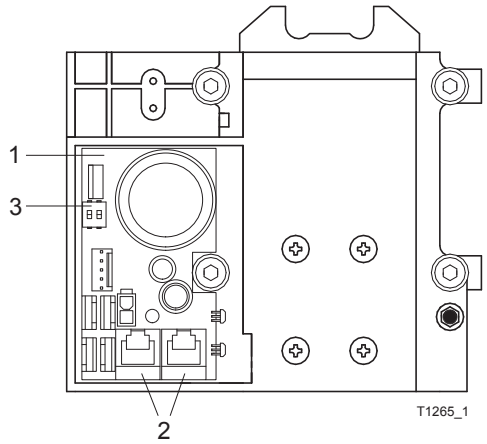

Connection Diagram

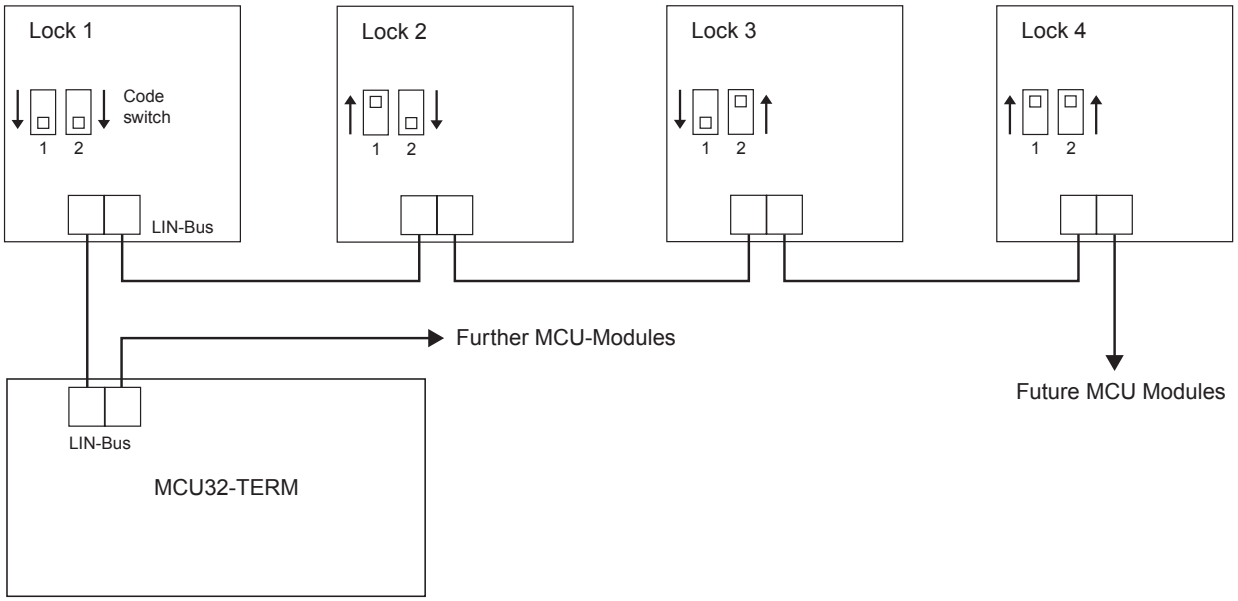

Installation

Mount the lock unit at a suitable position with the 4 screws and groove blocks in the supporting profile.
On single leaf units the counter bolts are attached to the supporting profile.

LIN Connection

- Cut to length and assemble the LIN connection cable on both ends with a FCC 6-pole plug .
  .
  FCC-plug is polarity sensitive.

FCC 6 pole 98’ Max. FCC 6 pole

First connect the LIN cable and FCP to the slide door drive then switch the 110 vAC on.

Commissioning

Programming Through FCP See T-1272 e

See programming table for specific lock functions

Component Dimensions

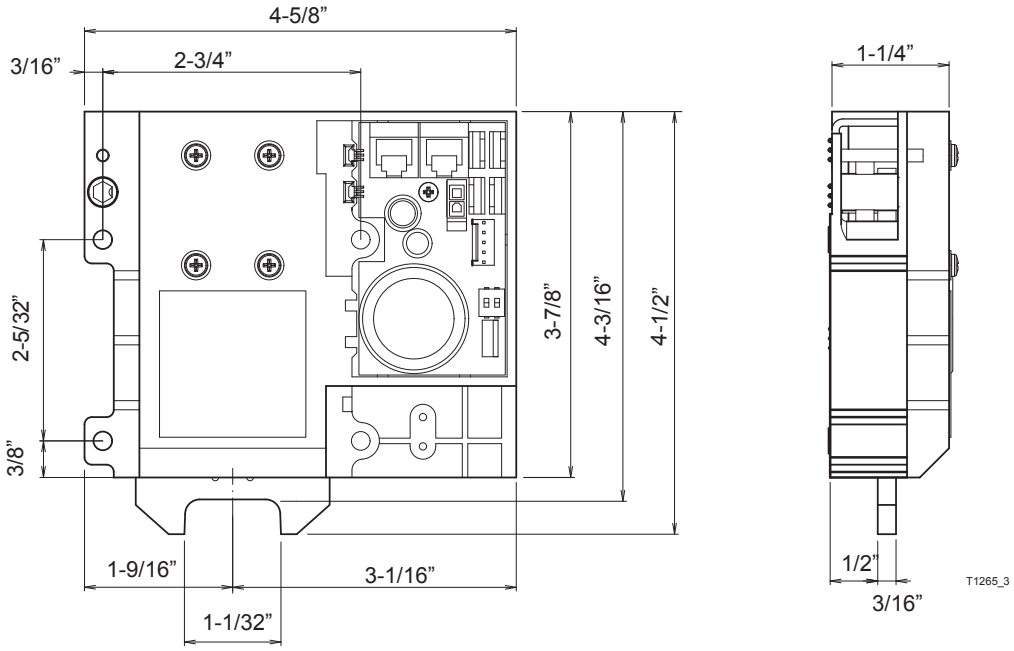

Technical Data

Rated voltage of solenoid	12 V DC
Maximum power of solenoid	40 W
Loading of 24 V sensor power supply	100 mA
LIN Interface	FCC 6-Pol
Length of all LIN cables:	< 98’ (Foot)
LIN cable length between modules:	< 30 m with phone ribbon cable 6 x 0,14 mm^2
	< 100 m with LIN-Bus-Adapter MCU32-LADP-A
Ambient temperature	–4 °F … +122 ° F
Interface	MCU32-TERM
	Monitoring for lock 01
	Manual disengagement

T-1268 e	Module Documentation Battery Unit MCU32-BATU-24-1-B	TORMAX AUTOMATIC 12859 Wetmore Road San Antonio,Tx 78247 1-888-685-3707 www.tormaxusa.com
Area of application	iMotion 2301 & 2401 Slide Door Drive	
Release	Feb. 2008	
Use	Installation	

Purpose

This battery unit is design to be used on iMotion 2301 or 2401 Slide Door Drives. The module is used for limited time operation of the system and/or for accomplishment of a final motion into a determined position.

Functional Principle

The battery unit includes the batteries MCU32-ACCU-24-1-A and the battery module MCU32-BATT-24-1-B (1).

The batteries store the energy required to continue system operation on power failure. The battery module contains a charging circuit that charges the batteries in the presence of mains power and/or holds them in the charged state. In order to avoid total discharge, the battery can be switched off with a switch.

The operational function depends on the programming of the basic control system. See programming table for programming options.

The wake-up function allows renewed switching on with subsequent door opening after the battery has been disconnested. The function depends on the current charge of the accumulators and necessitates a connected key switch (4).

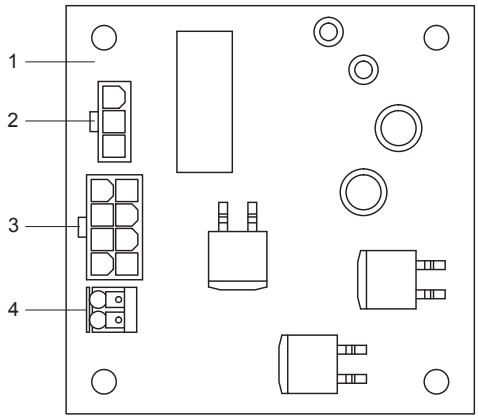

1 Battery module
2 Connector BAT
3 Connector A
4 Terminal key switch

Connection Diagram

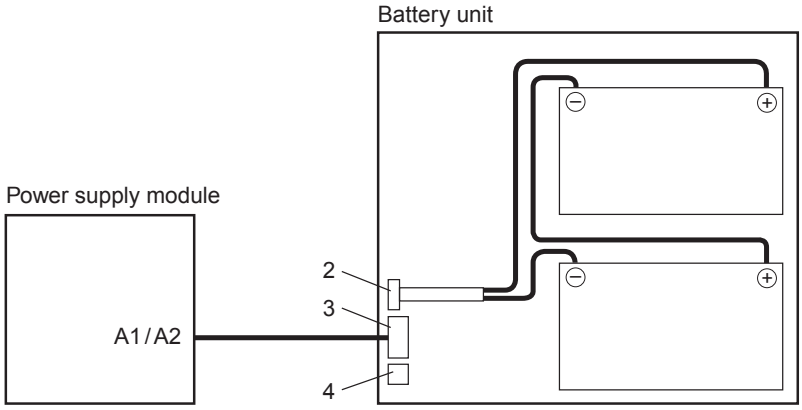

Installation

- Mount the battery unit at the suitable position with screws and groove blocks
- Connect the battery unit with the power supply module as shown in the connection diagram

When connecting the batteries make sure that the polarities are not interchanged and the contacts are not short circuited. A sudden discharge may cause an explosion of the batteries. The constituents are highly poisonous.

Commissioning

The battery module is detected automatically during auto configuration.
See Commissioning of the Entire System T-1272e

Component Dimensions

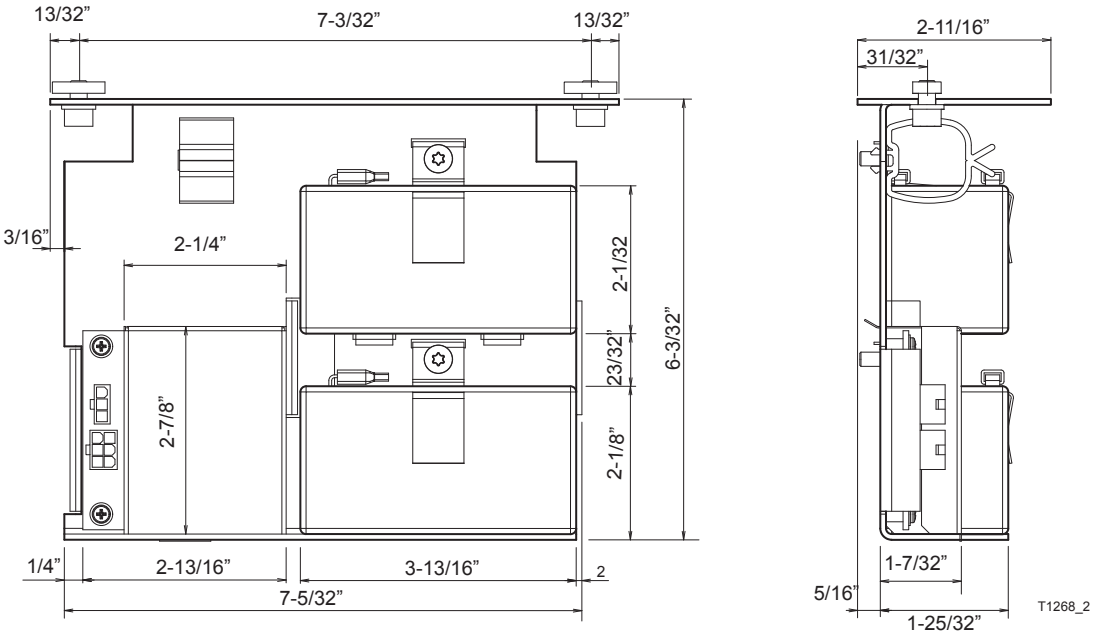

Technical Data

Rated voltage	24 VDC
Maximum power	120 W
Batteries	2 × 12 V / 1.2 Ah (52 × 97 × 43 mm)
Ambient temperature	32° F… +104° F
Interfaces	MCU32-PSUP-40-18-C MCU32-PSUP-40-36-A

T-1269 e	Module Documentation Power Supply Module	TORMAX AUTOMATIC 12859 Wetmore Road San Antonio,Tx 78247 1-888-685-3707 www.tormaxusa.com
Area of application	iMotion 2301 & 2401 Door Drives	
Release	April 2008	
Use	Installation and Maintainence	

Purpose

To provide intermediate circuit voltage and the 24 V sensor voltage from the transformer or the battery unit.

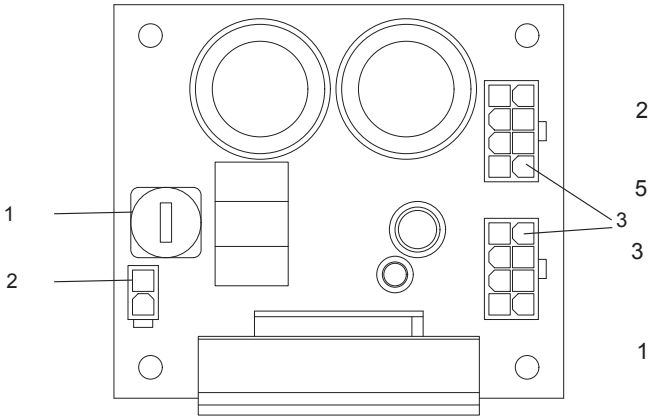

2301 Door Drive
Power Supply Module : MCU32-PSUP-40-18-C

1 Fuse 8A T (25 VAC)
2 Connector AC for connection to transformer
3 Connector A1 for connection to base module MCU32-BASE-40-200-A or battery module MCU32-BATT-24-1-B

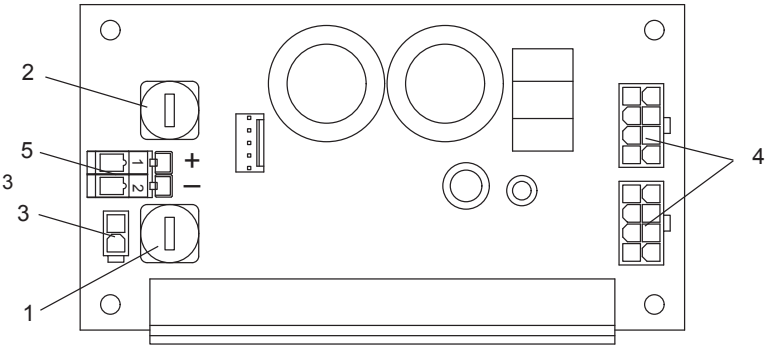

2401 Door Drive
Power Supply Module : MCU32-PSUP-40-36-A

1 Fuse 8-A slow blow (25 VAC transformer)
2 Fuse 5-A slow blow (24 … 42 V ext. DC source)
3 Connector AC for connection to transformer
4 Connector A1 for connection to base module MCU32-BASE-40-200-A or battery module MCU32-BATT-24-1-B
5 DC terminal for connection of external DC source

Installation

The module must be protected against electrostatic discharge (ESD) when touching it.

- Fasten the printed circuit board in the power-free state at the designated points.
- Switch on the power supply only after all surrounding MCU32 modules are connected.

Module Connections

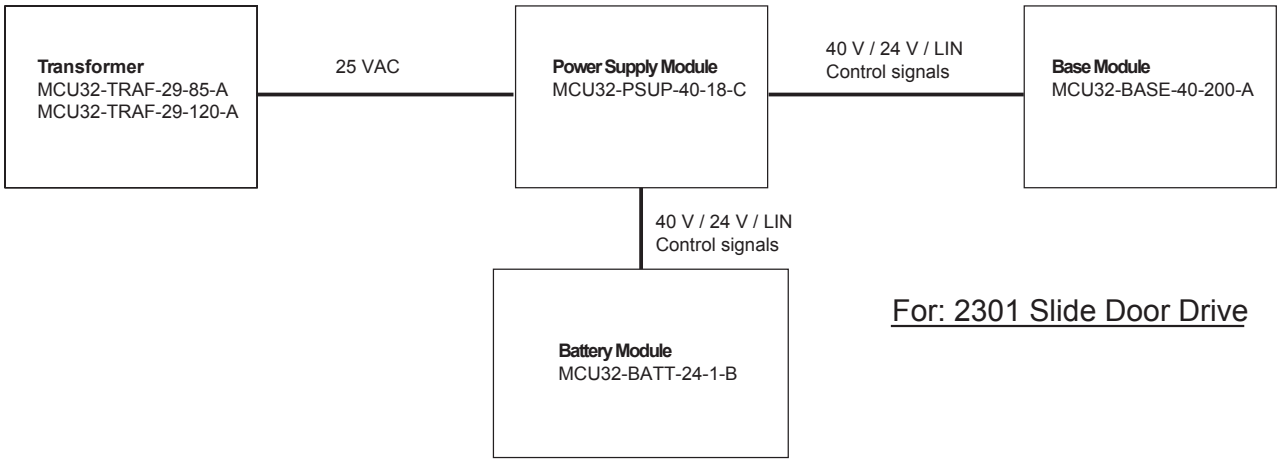

For: 2301 Slide Door Drive

Module Connections

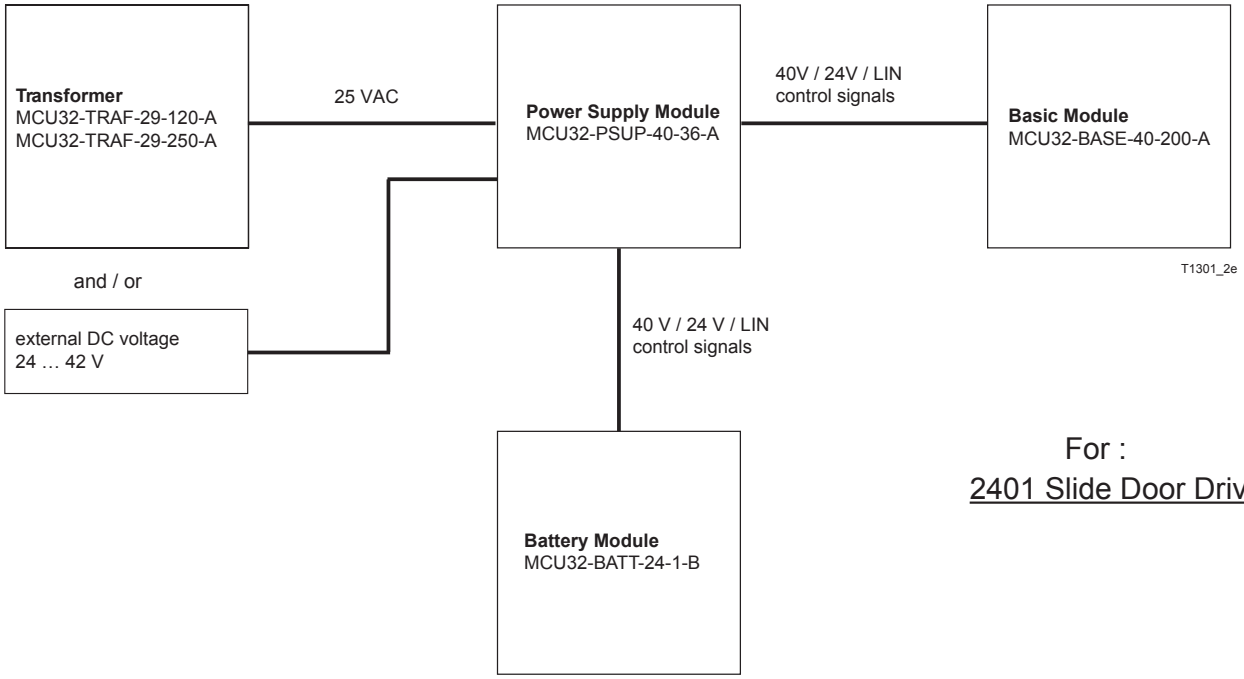

For :
2401 Slide Door Drive

Technical Data

	2301	2401
Rated voltage (input, from transformer) Nominal power (input, from transformer)	25 V AC 85 VA	25 V AC 250 VA
Rated Voltage (input,from ext.DC voltage) Nominal Power (input, from ext.DC Voltage)	24 V DC ....42 V DC -	24 V DC ....42 V DC 5 A
Rated voltage (input, from battery module) Maximum power (input, from battery module) Maximum current 24 V sensor power supply (output)	- 120W 0.75 A	24 V DC 120 W 1.5 A
Ambient temperature Dimensions length x width x height (mm) Interfaces	–4°F to +122°F 3-1/8”x 2-3/4”x 1-11/16” Transformer MCU32-TRAF-29-85-A Battery module MCU32-BATT-24-1-B Base module MCU32-BASE-40-200-A	–4°F to +122°F 5-1/8”x2-3/4”x1-11/16” Transformer MCU32-TRAF-29-250-A Battery module MCU32-BATT-24-1-B Base module MCU32-BASE-40-200-A

Purpose

Control system component for iMotion 1301, 1401 Swing Door Drive and iMotion 2202, 2301, 2401 Sliding Door Drive.

Function

The base module is the central functional control system of the MCU32 module family. The module contains the processor system including a non-volatile (i.e. voltage failure safe) memory for the adjusted values, a 3-phase converter for the motor and the drivers for the interfaces OUT1-2, PWM, as well as LIN and CAN.

The control system can be programmed by means of the software iMotion Skipper or the user interface MCU32-USIN-7-A. For access to the full function range, the configuration card MCU32-CONF is required. The software of the base module „firmware“ can be updated by means of a PC or handheld with iMotion Skipper.

The control system is programmed with the FCP.

Base module MCU32-BASE-40-200-A

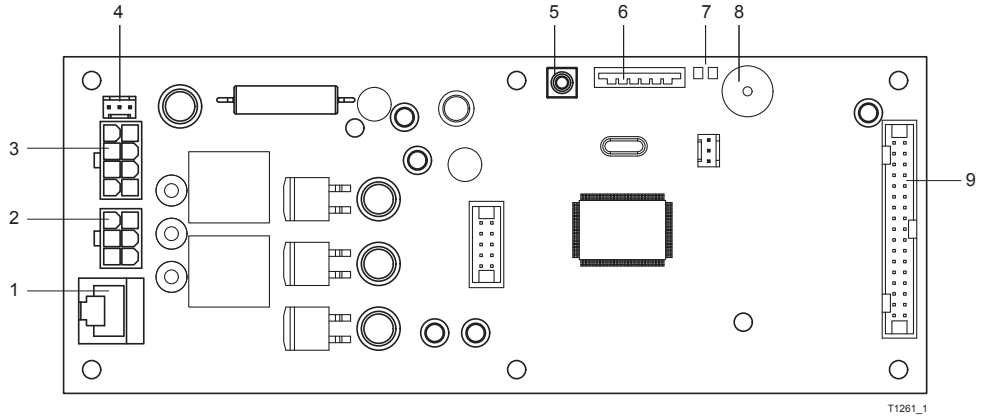

1 Connection for encoder MCU32-ENCO-24-16-A
2 Connection for motor MCU32-MOTR-40-… (*)
3 Connection for power supply module MCU32-PSUP-40-… (*)
4 Connection for potentiometer, closed position indicator
5 Push-button SW1 (for starting a download)
6 Slot for configuration card MCU32-CONF-… (*)
7 Display for power supply 24 V and 5 V
8 Beeper
9 Connection for terminal module MCU32-TERM-… (*)

(*) Different versions

Installation

The module must be protected against electrostatic discharge (ESD) when touching it.

- Fasten the printed circuit board at the predetermined points in the power-free condition.
- Switch on the power supply only after all surrounding MCU32 modules are connected.

Module Connections

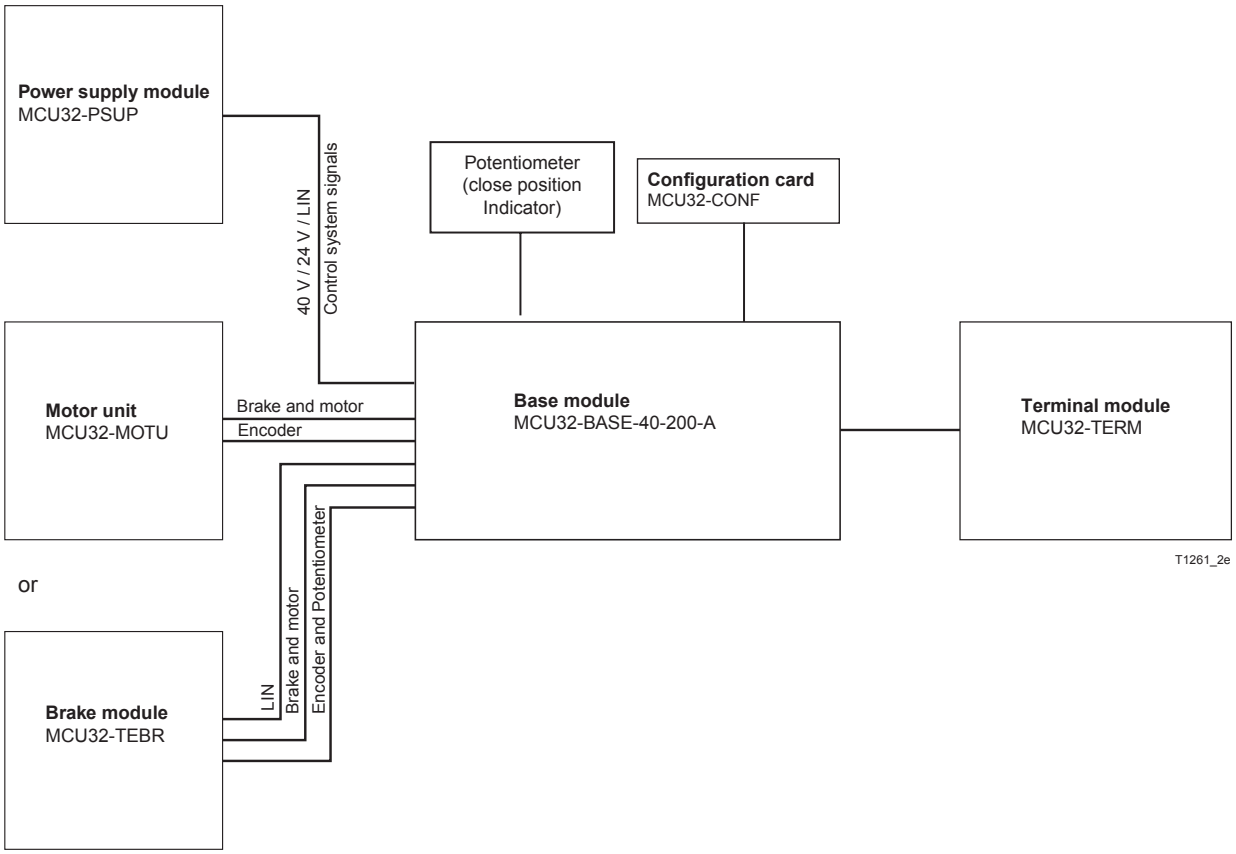

Commissioning

Program using FCP see T-1248

Technical Data

Processor	32 bits, 30 MHz
System monitoring	Complies with DIN 18650 requirements
Ambient temperature	–4°F....+167°F
Overheating protection	for power supply 40 V
Dimensions	7.873x 3.031 inch
Module interfaces:	MCU32-PSUP
	MCU32-MOTU
	MCU32-TERM
	MCU32-CONF
	MCU32-TEBR

T-1264 e	Module Documentation Function Control Panel (FCP) MCU32-USIN-7-A	TORMAX AUTOMATIC 12859 Wetmore Road San Antonio, TX 78247 1-888-685-3707 www.tormaxusa.com
Area of application	iMotion 1301, 1401 Operators and 2301, 2401 Drives	
Release	October 2013	
Use	Programming and mode selection	

Purpose

Operating and programming of the automatic door with TORMAX iMotion universal processor.

Functional control panel (FCP) MCU32-USIN-7-A

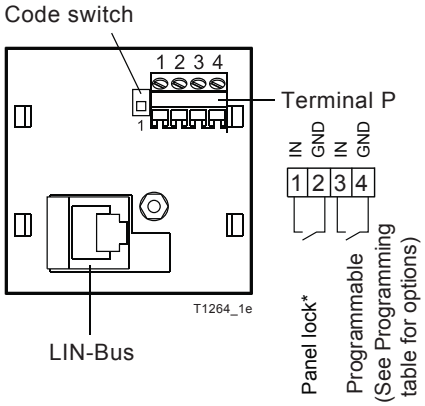

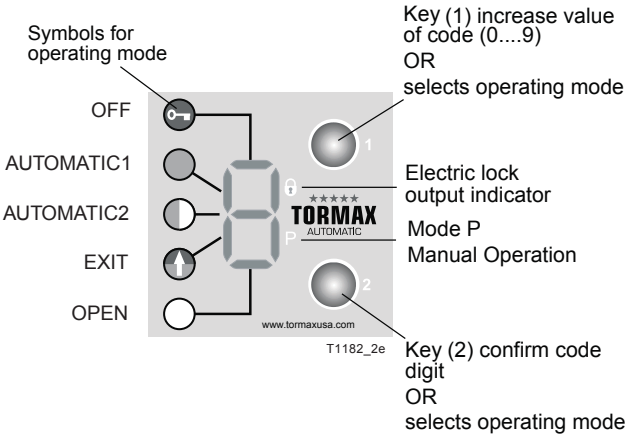

Connection Diagram

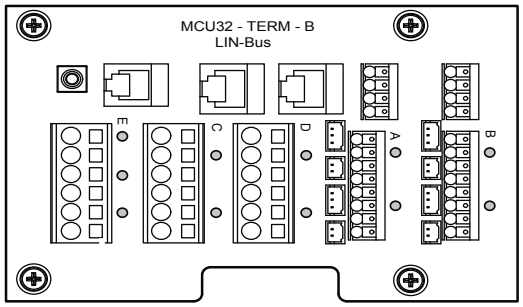

Connection Option 1

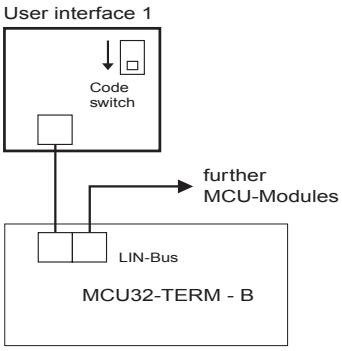

Connection Option 2

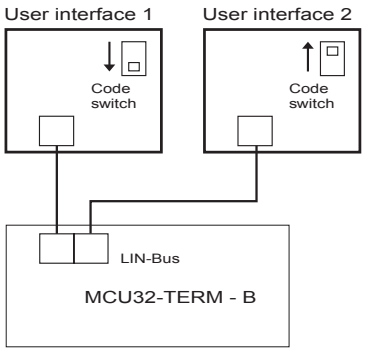

Connection Option 3

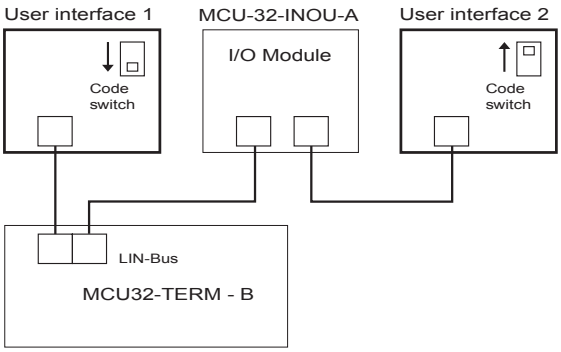

- Switch mains 115 V AC ON after the functional control panel(FCP) is connected.

LIN Connection

- Cut to length and assemble the LIN connection cable on both ends with a FCC 6-pole plug
- FCC plug is polarity sensitive

FCP 6 pole 98’ Max FCP 6 pole

- First connect the LIN cable and FCP to the 2301 or 2401 Door Drive then switch the 115 VAC on.

Technical Data

Inputs:	2 × Pull up in: 24 VDC / 3 mA, function programmable
Terminal cross section:	0.5 mm^2 (strand or wire)
Interface	LIN, FCC 6-Pol
Ambient Temperature:	–4°F…+122°F
Dimensions:	1.7716 inch x1.7716 inch
LIN cable length:	98’ Max

T-1360 e	Module Documentation Input / Output Module MCU32-INOU-A	★★★★★ TORMAX AUTOMATIC 12859 Wetmore Road San Antonio,Tx78247 1-888-685-3707 www.tormaxusa.com
Area of application	iMotion 1301, 1401, 2301, 2401	
Release	January 2010	
Use	Input/Output terminal board	

Purpose

Additional inputs and outputs for automatic door drives with iMotion. Not suitable for time-critical applications such as security or safety functions.

Function

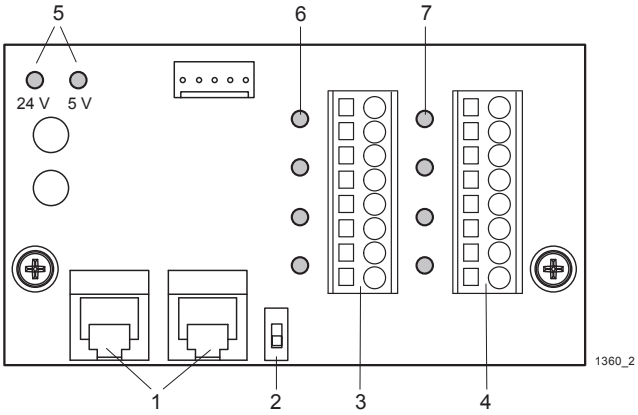

1 LIN-Bus
2 Code switch for LIN address
3 Input 1 … 4
4 Output 1 … 4
5 Display power supply
6 Display status of inputs 1 … 4
7 Display status of outputs 1 … 4

The IO module receives its control commands from the base module via the LIN-Bus (1). The two LIN plugs are identical. Each module must have a unique LIN address which can be set with the code switch (2). The function of the inputs and outputs depends on the programming of the basic control system. See the MCU programming table in the Extranet for the functions.

A self-resetting thermal cut-out protects the control system's 24 V power supply against continuous overload. The thermal cut-out resets itself immediately after the overload is removed.

Connection Diagram

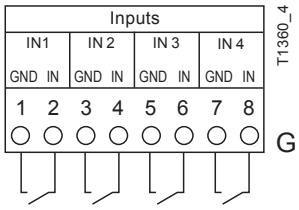

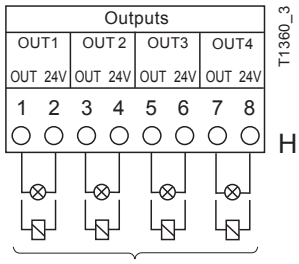

Load on the 24 V system max. 25 mA per output.

The inputs must not be used for security or safety-related functions (e.g. light beams).

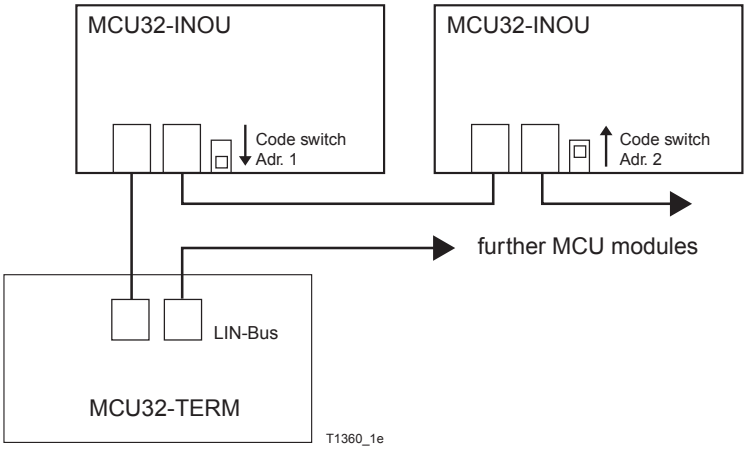

The 24 VDC power supply on this module must not be used as the power supply to sensors.

Installation

The module is installed on the module carrier.

LIN Connection

- Cut to length and assemble the LIN connection cable on both ends with a FCC 6-pole plug (article see TORMAX price list).

The polarity of the FCC-plug is not of importance.

For alternative cable connections via adapter with terminal connection see module documentation LIN-Bus adapter T-1322.

Commissioning

The modules must be coded according to the connection diagram.
The modules are detected automatically when initiating the auto configuration.

See programming table in the manual for input and output functions (021). No functions are programmed as standard.

Technical Data

Inputs:	4 x Pull up in: 24 VDC / 5 mA, function programmable
Outputs:	Transistor out: 24 VDC / Continuous current max. 25 mA, function programmable
Input/output reaction time:	with 1 module MCU-INOU-A < 50 ms with 2 modules MCU-INOU-A < 100 ms
Power supply 24 V:	Total continuous load < 100 mA
Terminal cross section:	0.14 … 1.5 mm^2 (recommended conductor cross section: 0.5 mm^2)
LIN Interface	FCC 6-Pol
Length of all LIN cables:	< 100 m
LIN cable length between modules:	98’ Max
Ambient temperature:	–4° F … +122° F
Dimensions:	2 5/32” - 3 11/16”
Module interface:	MCU32-TERM

TORMAX
AUTOMATIC

Your First Choice for Automatic Doors

TORMAX Sliding Doors

TORMAX Swing Doors

Sales, Installation and Service.
Automatic and Manual Doors

TORMAX USA INC.
12859 Wetmore Road
San Antonio, TX 78247
888-685-3707
www.tormaxusa.com